Cat. No. I127E-EN-05A

SX-V
V2.1

Instruction Manual

Omron SX-V

INSTRUCTION MANUAL - ENGLISH

Valid from Software version 5.00

Document number: **I127E-EN-05A**
Document name : Omron SX-V inverter manual
Date of release: 10-2021
© OMRON, 2021
All rights reserved. No part of this publication may be reproduced, stored in a retrieval system, or transmitted, in any form, or by any means, mechanical, electronic, photocopying, recording, or otherwise, without the prior written permission of OMRON.
No patent liability is assumed with respect to the use of the information contained herein. Moreover, because OMRON is constantly striving to improve its high-quality products, the information contained in this manual is subject to change without notice. Every precaution has been taken in the preparation of this manual.
Nevertheless, OMRON assumes no responsibility for errors or omissions. Neither is any liability assumed for damages resulting from the use of the information contained in this publication.

Safety Instructions

Congratulations for choosing a product from Omron!

Before you begin with installation, commissioning or powering up the unit for the first time it is very important that you carefully study this Instruction manual.
Following symbols can appear in this instruction or on the product itself. Always read these first before continuing.

NOTE: Additional information as an aid to avoid problems.

CAUTION!
Failure to follow these instructions can result in malfunction or damage to the AC drive.

Warning!
Failure to follow these instructions can result in serious injury to the user in addition to serious damage to the AC drive.

HOT SURFACE!
Failure to follow these instructions can result in injury to the user.

Handling the AC drive

Installation, commissioning, demounting, taking measurements, etc, of or on the AC drive may only be carried out by personnel technically qualified for the task. A number of national, regional and local regulations govern handling, storage and installation of the equipment. Always observe current rules and legislation.

Opening the AC drive

WARNING!
Always switch off the mains voltage before opening the AC drive and wait at least 7 minutes to allow the capacitors to discharge.

Always take adequate precautions before opening the AC drive. Although the connections for the control signals and the switches are isolated from the main voltage, do not touch the control board when the AC drive is switched on.

Incorrect connection

The AC drive is not protected against incorrect connection of the mains voltage, and in particular against connection of the mains voltage to the motor outlets U, V and W. The AC drive can be damaged in this way. Risk for personal injury.

Precautions to be taken with a connected motor

If work must be carried out on a connected motor or on the driven machine, the mains voltage must always be disconnected from the AC drive first. Wait at least 7minutes before starting work.

Earthing

The AC drive must always be earthed via the mains safety earth connection.

Earth leakage current

CAUTION!
This AC drive has an earth leakage current which does exceed 3.5 mA AC. Therefore the minimum size of the protective earth conductor must comply with the local safety regulations for high leakage current equipment which means that according to the standard IEC61800-5-1 the protective earth connection must be assured by one of following conditions:
PE conductor cross-sectional area shall for phase cable size $\leq$ 16 mm^2 (6 AWG) be >10 mm^2 Cu (16 mm^2 Al) or use a second PE conductor with same area as original PE conductor.
For cable size above 16 mm^2 (6 AWG) but smaller or equal to 35mm^2 (2 AWG) the PE conductor cross-sectional area shall be at least 16mm^2 (6 AWG).
For cables >35 mm^2 (2 AWG) the PE conductor cross-sectional area should be at least 50 % of the used phase conductor.
When the PE conductor in the used cable type is not in accordance with the above mentioned cross-sectional area requirements, a separate PE conductor should be used to establish this.

Residual current device (RCD) compatibility

This product cause a DC current in the protective conductor. Where a residual current device (RCD) is used for protection in case of direct or indirect contact, only a Type B RCD is allowed on the supply side of this product. Use RCD of 300 mA minimum.

EMC Regulations

In order to comply with the EMC Directive, it is absolutely necessary to follow the installation instructions. All installation descriptions in this manual follow the EMC Directive.

Mains voltage selection

The AC drive may be ordered for use with the mains voltage range listed below.

SX-V48: 230-480 V
SX-V69: 500-690 V

Voltage tests (Megger)

Do not carry out voltage tests (Megger) on the motor, before all the motor cables have been disconnected from the AC drive.

Condensation

If the AC drive is moved from a cold (storage) room to a room where it will be installed, condensation can occur. This can result in sensitive components becoming damp. Do not connect the mains voltage until all visible dampness has evaporated.

Power factor capacitors for improving cosφ

Remove all capacitors from the motor and the motor outlet.

Precautions during Autoreset

When the automatic reset is active, the motor will restart automatically provided that the cause of the trip has been removed. If necessary take the appropriate precautions.

Transport

To avoid damage, keep the AC drive in its original packaging during transport. This packaging is specially designed to absorb shocks during transport.

IT Mains supply

The AC drives can be modified for an IT mains supply, (non-earthed neutral), please contact your supplier for details.

Alarms

Never disregard an alarm. Always check and remedy the cause of an alarm.

Heat warning

HOT SURFACE!
Be aware of specific parts on the AC drive having high temperature.

DC-link residual voltage

WARNING!
After switching off the mains supply, dangerous voltage can still be present in the AC drive. When opening the AC drive for installing and/or commissioning activities wait at least 7 minutes. In case of malfunction a qualified technician should check the DC-link or wait for one hour before dismantling the AC drive for repair.

Contents

Safety Instructions 1

Contents 3

1. Introduction 7

1.1 Delivery and unpacking 7
1.2 Using of the instruction manual 7
1.2.1 Instruction manuals for optional equipment 7
1.3 Warranty 8
1.4 Type code number 9
1.5 Standards 10
1.5.1 Product standard for EMC 10
1.6 Dismantling and scrapping 11
1.6.1 Dispose of old electrical and electronic equipment ... 11
1.7 Glossary 12
1.7.1 Abbreviations and symbols 12
1.7.2 Definitions 12

2. Mounting 13

2.1 Lifting instructions 13
2.2 Stand-alone units 14
2.2.1 Cooling 14
2.2.2 Mounting schemes 15
2.3 Cabinet mounting 22
2.3.1 Cooling 22
2.3.2 Recommended free space in front of cabinet 22
2.3.3 Mounting schemes, cabinets 23

3. Installation 25

3.1 Before installation 25
3.1.1 Remove/open front cover 25
3.1.2 Remove/open the lower front cover on Frame size E2, F2 and FA2 (IP20/21) 26
3.2 Cable connections for small and medium frame sizes 26
3.2.1 Mains cables 26
3.2.2 Motor cables 29
3.3 Connection of motor and mains cables for larger frame sizes 32
3.3.1 Connection of mains and motor cables on IP20 modules 34
3.4 Cable specifications 36
3.4.1 Stripping lengths 36
3.4.2 Fuse data 38
3.4.3 Cable connection data for mains, motor and PE cables according to IEC ratings 39
3.4.4 Cable connection data for mains, motor and PE cables according to NEMA ratings 43
3.5 Thermal protection on the motor 45
3.6 Motors in parallel 45

4. Control Connections 47

4.1 Control board 47
4.2 Terminal connections 48
4.2.1 Stand by supply interface (SBS) 49
4.3 Configuration with jumpers and switches 49
4.3.1 Analogue input configuration (S1 - S4) 49
4.3.2 RS-485 termination (S5) 49
4.4 Connection example 50
4.5 Connecting the Control Signals 51
4.5.1 Cables 51
4.5.2 Types of control signals 53
4.5.3 Screening 53
4.5.4 Single-ended or double-ended connection? 53
4.5.5 Current signals ((0)4-20 mA) 54
4.5.6 Twisted cables 54
4.6 Connecting options 54

5. Getting Started 55

5.1 Connect the mains and motor cables 55
5.1.1 Mains cables 55
5.1.2 Motor cables 55
5.2 Using the function keys 56
5.3 Remote control 56
5.3.1 Connect control cables 56
5.3.2 Switch on the mains 56
5.3.3 Set the Motor Data 57
5.3.4 Run the AC drive 57
5.4 Local control 57
5.4.1 Switch on the mains 57
5.4.2 Select manual control 57
5.4.3 Set the Motor Data 57
5.4.4 Enter a Reference Value 57
5.4.5 Run the AC drive 57

6. Applications 59

6.1 Application overview 59
6.1.1 Pumps 59
6.1.2 Fans 59
6.1.3 Compressors 60
6.1.4 Blowers 60

7. Main Features 61

7.1 Parameter sets 61
7.1.1 Define parameter sets 61
7.1.2 Select and copy parameter set 61
7.1.3 One motor and one parameter set 62
7.1.4 One motor and two parameter sets 62
7.1.5 Two motors and two parameter sets 62
7.1.6 Autoreset at trip 62
7.1.7 Reference priority 63
7.1.8 Preset references 63
7.2 Remote control functions 64
7.3 Performing an Identification Run 66
7.4 Using the Control Panel Memory 66
7.5 Load Monitor and Process Protection [400] 67
7.5.1 Load Monitor [410] 67
7.6 Pump function 69
7.6.1 Introduction 69
7.6.2 Fixed MASTER 70
7.6.3 Alternating MASTER 70
7.6.4 Feedback 'Status' input 70
7.6.5 Fail safe operation 71

7.6.6 PID control ... 72
7.6.7 Wiring Alternating Master ... 73
7.6.8 Checklist And Tips ... 74
7.6.9 Functional Examples of Start/Stop Transitions ... 75

8. EMC and standards ... 77

8.1 EMC standards ... 77
8.2 Stop categories and emergency stop ... 77
8.3 EcoDesign product information per EU Directive 2019/1781 ... 78
8.3.1 EcoDesign data for 400 V - IP20/54 drive units ... 78
8.3.2 EcoDesign data for 400 V - IP54 drive units ... 79
8.3.3 EcoDesign data for 690 V - IP20/54 drive units ... 80

9. Communication ... 83

9.1 Modbus RTU ... 83
9.2 Parameter sets ... 83
9.3 Motor data ... 84
9.4 Start and stop commands ... 84
9.5 Reference signal ... 84
9.5.1 Process value ... 84
9.6 Description of the EInt formats ... 85

10. Operation via the Control Panel 87

10.1 General ... 87
10.1.1 Two different control panels ... 87
10.2 Control panel with 4-line display ... 87
10.2.1 The display ... 87
10.2.2 Menu [100] Start Window ... 89
10.2.3 Editing mode ... 89
10.2.4 Fault logger ... 90
10.2.5 Real Time clock ... 90
10.2.6 LED indicators ... 90
10.2.7 Control keys ... 90
10.2.8 The Toggle and Loc/Rem Key ... 91
10.2.9 Function keys ... 92
10.3 Control panel with 2-line display ... 92
10.3.1 The display ... 92
10.3.2 Indications on the display ... 93
10.3.3 LED indicators ... 93
10.3.4 Control keys ... 93
10.3.5 The Toggle and Loc/Rem Key ... 94
10.3.6 Function keys ... 95
10.4 The menu structure ... 95
10.4.1 The main menu ... 96
10.5 Programming during operation ... 96
10.6 Editing values in a menu ... 96
10.7 Copy current parameter to all sets ... 96
10.8 Programming example ... 97

11. Functional Description ... 99

11.1 2-line LCD display ... 99
11.2 4-line LCD display ... 100
11.3 Menus ... 101
11.3.1 1st Line [110] ... 101
11.3.2 2nd Line [120] ... 102
11.3.3 3rd Line [130] ... 102
11.3.4 4th Line [140] ... 102
11.3.5 5th Line [150] ... 102
11.3.6 6th Line [160] ... 102
11.3.7 View mode [170] ... 103
11.4 Main Setup [200] ... 103
11.4.1 Operation [210] ... 103
11.4.2 Remote Signal Level/Edge [21A] ... 108
11.4.3 Mains supply voltage [21B] ... 108
11.4.4 Motor Data [220] ... 109
11.4.5 Motor Protection [230] ... 117
11.4.6 Parameter Set Handling [240] ... 122
11.4.7 Trip Autoreset/Trip Conditions [250] ... 124
11.4.8 Serial Communication [260] ... 131
11.4.9 Wireless [270] ... 137
11.5 Process and Application Parameters [300] ... 139
11.5.1 Set/View Reference Value [310] ... 139
11.5.2 Process Settings [320] ... 140
11.5.3 Start/Stop settings [330] ... 144
11.5.4 Mechanical brake control ... 148
11.5.5 Speed [340] ... 152
11.5.6 Droop Speed [349] ... 155
11.5.7 Torques [350] ... 156
11.5.8 Preset References [360] ... 158
11.5.9 PID Process Control [380] ... 159
11.5.10 Pump/Fan Control [390] ... 163
11.6 Load Monitor and Process Protection [400] ... 171
11.6.1 Load Monitor [410] ... 171
11.6.2 Process Protection [420] ... 176
11.7 I/Os and Virtual Connections [500] ... 178
11.7.1 Analogue Inputs [510] ... 178
11.7.2 Digital Inputs [520] ... 184
11.7.3 Analogue Outputs [530] ... 186
11.7.4 Digital Outputs [540] ... 190
11.7.5 Relays [550] ... 192
11.7.6 Virtual Connections [560] ... 194
11.8 Logical Functions and Timers [600] ... 195
11.8.1 Comparators [610] ... 195
11.8.2 Analogue Multiplexer [620] ... 201
11.8.3 Not Gate [630] ... 202
11.8.4 Logic output [640] ... 203
11.8.5 Timers [650] ... 205
11.8.6 Flip flops [660] ... 207
11.8.7 Clock Logic [680] ... 210
11.9 View Operation/Status [700] ... 211
11.9.1 Operation [710] ... 211
11.9.2 Status [720] ... 214
11.9.3 Stored values [730] ... 218
11.10 View Trip Log [800] ... 219
11.10.1 Trip message log with RTC [8x0] ... 219
11.10.2 Trip Message log without RTC [8x0] ... 219
11.10.3 Trip message log [810] ... 219
11.10.4 Trip Messages [82P] - [89P] ... 220
11.10.5 Reset Trip Log [8A0] ... 221

11.11 System Data [900] 221
11.11.1 VSD Data [920] 221
11.11.2 Real Time clock 223

12. Troubleshooting, Diagnoses and Maintenance 225

12.1 Trips, warnings and limits 225
12.2 Trip conditions, causes and remedial action 226
12.2.1 Technically qualified personnel 227
12.2.2 Opening the AC drive 227
12.2.3 Precautions to take with a connected motor 227
12.2.4 Autoreset Trip 227
12.3 Maintenance 231

13. Options 233

13.1 Control panel 233
13.2 External control panel kits (4-line) 233
13.2.1 Control panel kit, including blank panel 233
13.2.2 Control panel kit, including control panel 233
13.3 control panel 234
13.4 Handheld Control Panel 2.0 234
13.5 Gland kits 235
13.6 CX-Drive 235
13.7 Brake chopper 235
13.8 I/O Board 237
13.9 Encoder 237
13.10 PTC/PT100 237
13.11 Communication options 237
13.12 Standby supply board with isolated DC-voltage measurement 238
13.13 Safe Stop option 238
13.14 EMC filter class C1/C2 238
13.15 Output chokes 238
13.16 Liquid cooling 238
13.17 Top cover for IP20/21 version 239
13.18 Other options 239
13.19 AFE - Active Front End 239

14. Technical Data 241

14.1 Electrical specifications related to model 241
14.2 General electrical specifications 248
14.3 Operation at higher temperatures 250
14.4 Operation at higher switching frequency 250
14.5 Dimensions and Weights 251
14.6 Environmental conditions 254
14.7 Fuses and glands 255
14.7.1 According to IEC ratings 255
14.7.2 Fuses according to NEMA ratings 259
14.8 Control signals 260

15. Menu List 263

Index 287

1. Introduction

Omron SX-V is used most commonly to control and protect pump and fan applications that put high demands on flow control, process uptime and low maintenance costs. It can also be used for e.g. compressors and blowers. The used motor control method is V/Hz-control. Several options are available, listed in chapter 13. page 233, that enable you to customize the AC drive for your specific needs.

NOTE: Read this instruction manual carefully before starting installation, connection or working with the AC drive.

Users

This instruction manual is intended for:

- installation engineers
- maintenance engineers
- service engineers

Motors

The AC drive is suitable for use with standard 3-phase asynchronous motors. Under certain conditions it is possible to use other types of motors. Contact your supplier for details.

1.1 Delivery and unpacking

Check for any visible signs of damage. Inform your supplier immediately of any damage found. Do not install the AC drive if damage is found.
Check that all items are present and that the type number is correct.

1.2 Using of the instruction manual

Within this instruction manual the abbreviation “AC drive” is used to indicate the complete variable speed drive as a single unit.

Check that the software version number on the first page of this manual matches the software version in the AC drive. See chapter 11.11.1 page 221

With help of the index and the table of contents it is easy to track individual functions and to find out how to use and set them.

The Quick Setup Card can be put in a cabinet door, so that it is always easy to access in case of an emergency.

1.2.1 Instruction manuals for optional equipment

In the following table we have listed available options and the name of the Instruction manual or data sheet/ Instruction plus document number. Further in this main manual we are often referring to these instructions.

Table 1 Available options and documents

Option	Valid instruction manual/ document number
I/O board	I/O board 2.0, instruction manual / 01-5916-01
Encoder board	Omron Encoder board 2.0, Instruction manual / 01-5917-01
PTC/PT100 board	PTC/PT100 board 2.0, instruction manual / 01-5920-01
CRIO board (SX-F)	Omron AC Drive Crane option 2.0, Instruction manual
Crane interface (SX-F)	
Fieldbus - Profibus	Fieldbus Option, Instruction manual / 01-3698-01
Fieldbus - DeviceNet	
Fieldbus - CANopen	
Ethernet - Modbus TCP	
Ethernet - EtherCAT	
Ethernet - Profinet IO 1-port	
Ethernet - Profinet IO 2-port	
Ethernet - EtherNet/IP 2-port	
RS232/RS485 isolated	Omron isolated RS232 / 485 2.0 option Instruction manual / 01-5919-01
Control panel kit, Incl blank panel	Omron SX-V/SX-F 2.0 External Control Panel, instruction manual / 01-5928-01
Control panel kit, Incl control panel	
Handheld Control Panel HCP2.0	Omron HCP 2.0, instrucion manual / 01-5925-01
OSTO_100 option board	Omron OSTO_100 Safe Torque Off (STO) instruction manual/ 01-7513-11
Overshoot clamp	Overshoot clamp Datasheet/Instruction / 01-5933-11
Liquid cooling	Omron SX-V/SX-F 2.0 Liquid Cooling, instruction manual / 01-4636-01
Output choke	Output coils Datasheet/Instruction / 01-3132-11
AFE- Active front end	Omron SX-F/SX-V 2.0 AFE- Active Front End option, Instruction manual / 01-5386-01

1.3 Warranty

The warranty applies when the equipment is installed, operated and maintained according to instructions in this instruction manual. Duration of warranty as per contract. Faults that arise due to faulty installation or operation are not covered by the warranty.

1.4 Type code number

Fig. 1 gives an example of the type code numbering used on all AC drives. With this code number the exact type of the drive can be determined. This identification will be required for type specific information when mounting and installing. The code number is located on the product label, on the unit.

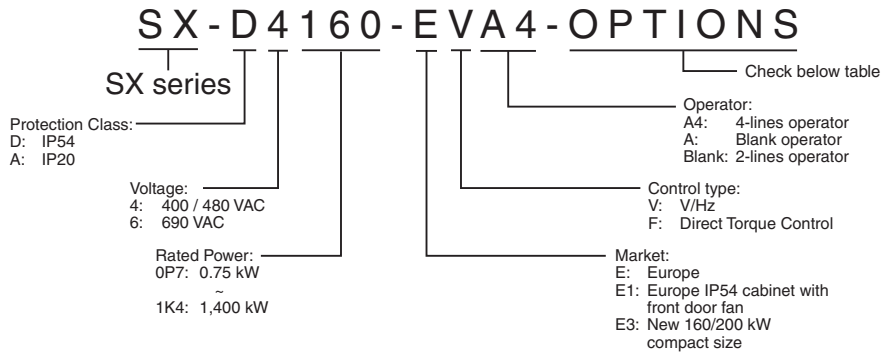

Fig. 1 Type designation

Options	Letter ("?" means no character)	Options	Letter ("?" means no character)
Built-in EMC filter	"?" = Standard EMC filter (Category C3) "B" = IT-Net (filter disconnected from ground) "B1" = EMC filter (Category C2)	Option board Fieldbus position 4	"?" = No option "L" = DeviceNet "M" = PROFIBUS-DP "M1" = PROFINET "N" = RS232/485 "O" = Ethernet Modbus TCP "O1" = EtherCAT
Built-in brake chopper	"?" = No brake chopper or DC-connection included "C" = Brake chopper & DC-connection included "D" = Only DC-connection included	Liquid Cooling	"?" = No Liquid Cooling "P" = Liquid Cooling
Safe stop	"?" = Not included "F" = Safe stop included	Standard	"?" = IEC "Q" = UL
Coated boards[*1]	"?" = No coating "G" = Coated boards	Marine[*2]	"?" = No marine option "R" = Marine option included
Option board position 1	"?" = No option "H" = Crane I/O "I" = Encoder "J" = PTC/PT100 "K" = Extended I/O	Cabinet input options	"?" = No cabinet input options "S" = Main switch included "T" = Main contactor included "U" = Main switch + contactor included
Option board position 2	"?" = No option "I" = Encoder "J" = PTC/PT100 "K" = Extended I/O	Cabinet output options	"?" = No cabinet output options included "V" = dV/dt filter included "W" = dV/dt filter + Overshoot clamp included "X" = Sinusfilter included "X1" = All-pole sinus filter included
Option board position 3	"?" = No option "I" = Encoder "J" = PTC/PT100 "K" = Extended I/O	Additional options	"Z1" = Common mode output filter "Z2" = Cable gland kit "Z3" = Motor PTC connection Only models from 0.37 to 37KW

[*1] IP20 models from 11 kW to 200 kW are coated from factory.
[*2] Marine option is not available for IP20 models from 11 kW to 200 kW.

* Serial no coding: PPPPRRYYWWSSSS
PPPP = Manufacturing plant
RR = Product revision no
YY = Manufacturing year
WW = Manufacturing week
SSSS = Serial no
E.g. 18410121010001

1.5 Standards

The AC drives described in this instruction manual comply with the standards listed in Table 2. For the declarations of conformity and manufacturer's certificate, contact your supplier for more information or visit www.industrial.omron.eu

1.5.1 Product standard for EMC

Product standard EN(IEC)61800-3, second edition of 2004 defines the:

First Environment (Extended EMC) as environment that includes domestic premises. It also includes establishments directly connected without intermediate transformers to a low voltage power supply network that supplies buildings used for domestic purposes.

Category C2: Power Drive System (PDS) of rated voltage<1.000 V, which is neither a plug in device nor a movable device and, when used in the first environment, is intended to be installed and commissioned only by a professional.

Second environment (Standard EMC) includes all other establishments.

Category C3: PDS of rated voltage <1.000 V, intended for use in the second environment and not intended for use in the first environment.

Category C4: PDS or rated voltage equal or above 1.000 V, or rated current equal to or above 400 A, or intended for use in complex systems in the second environment.

The AC drive complies with the product standard EN(IEC) 61800-3:2004 (Any kind of metal screened cable may be used). The standard AC drive is designed to meet the requirements according to category C3, for a motor cable length of maximum 80 m.

By using the optional "Extended EMC" filter the AC drive fulfils requirements according to category C2.

WARNING!
In a domestic environment this product may cause radio interference, in which case it may be necessary to take adequate additional measures.

WARNING!
The standard AC drive, complying with category C3, is not intended to be used on a low-voltage public network which supplies domestic premises; radio interference is expected if used in such a network. Contact your supplier if you need additional measures.

Table 2 Standards

Market	Standard	Description
European	EMC Directive	2014/30/EU
	Low Voltage Directive	2014/35/EU
	WEEE Directive	2012/19/EU
All	EN 60204-1	Safety of machinery - Electrical equipment of machines Part 1: General requirements.
	EN(IEC)61800-3:2004	Adjustable speed electrical power drive systems Part 3: EMC requirements and specific test methods. **EMC Directive**: **Declaration of Conformity and CE marking**
	EN(IEC)61800-5-1 Ed. 2.0	Adjustable speed electrical power drive systems Part 5-1. Safety requirements - Electrical, thermal and energy. **Low Voltage Directive**: **Declaration of Conformity and CE marking**
	IEC 60721-3-3	Classification of environmental conditions. Air quality chemical vapours, unit in operation. Chemical gases 3C2, Solid particles 3S2. Optional with coated boards Unit in operation. Chemical gases Class 3C3, Solid particles 3S2.
North & South America	ULC508C	UL Safety standard for Power Conversion Equipment
	USL	USL (United States Standards - Listed) complying with the requirements of UL508C Power Conversion Equipment
	UL 840	UL Safety standard for Power Conversion Equipment. Insulation coordination including clearances and creepage distances for electrical equipment.
	CNL	CNL (Canadian National Standards - Listed) complying with the requirements of CAN/CSA C22.2 No. 14-10 Industrial Control Equipment.
Russian	EAC	For all sizes.

1.6 Dismantling and scrapping

The enclosures of the drives are made from recyclable material as aluminium, iron and plastic. Each drive contains a number of components demanding special treatment, for example electrolytic capacitors. The circuit boards contain small amounts of tin and lead. Any local or national regulations in force for the disposal and recycling of these materials must be complied with.

1.6.1 Dispose of old electrical and electronic equipment

Dispose in accordance with applicable regulations.

1.7 Glossary

1.7.1 Abbreviations and symbols

In this manual the following abbreviations are used:

Table 3 Abbreviations

Abbreviation/ symbol	Description
DSP	Digital signals processor
AC drive	Frequency converter
PEBB	Power Electronic Building Block
IGBT	Insulated Gate Bipolar Transistor
CP	Control panel, the programming and presentation unit on the AC drive
HCP	Handheld control panel (option)
EInt	Communication format
UInt	Communication format (Unsigned integer)
Int	Communication format (Integer)
Long	Communication format
SELV	Safety Extra Low Voltage
🔒	The function cannot be changed in run mode

1.7.2 Definitions

In this manual the following definitions for current, torque and frequency are used:

Table 4 Definitions

Name	Description	Quantity
I_{IN}	Nominal input current of AC drive	A_{RMS}
I_{NOM}	Nominal output current of AC drive	A_{RMS}
I_{MOT}	Nominal motor current	A_{RMS}
P_{NOM}	Nominal power of AC drive	kW
P_{MOT}	Motor power	kW
T_{NOM}	Nominal torque of motor	Nm
T_{MOT}	Motor torque	Nm
f_{OUT}	Output frequency of AC drive	Hz
f_{MOT}	Nominal frequency of motor	Hz
n_{MOT}	Nominal speed of motor	rpm
I_{CL}	Maximum output current	A_{RMS}
Speed	Actual motor speed	rpm
Torque	Actual motor torque	Nm
Sync speed	Synchronous speed of the motor	rpm

2. Mounting

This chapter describes how to mount the AC drive.

Before mounting it is recommended that the installation is planned out first.

- Be sure that the AC drive suits the mounting location.
- The mounting site must support the weight of the AC drive.
- Will the AC drive continuously withstand vibrations and/or shocks?
- Consider using a vibration damper.
- Check ambient conditions, ratings, required cooling air flow, compatibility of the motor, etc.
- Know how the AC drive will be lifted and transported.

Note: IP20 units are intended for cabinet mounting.

2.1 Lifting instructions

Note: To prevent personal risks and any damage to the unit during lifting, it is advised that the lifting methods described below are used.

Recommended for AC drive models 45 KW to 200 KW

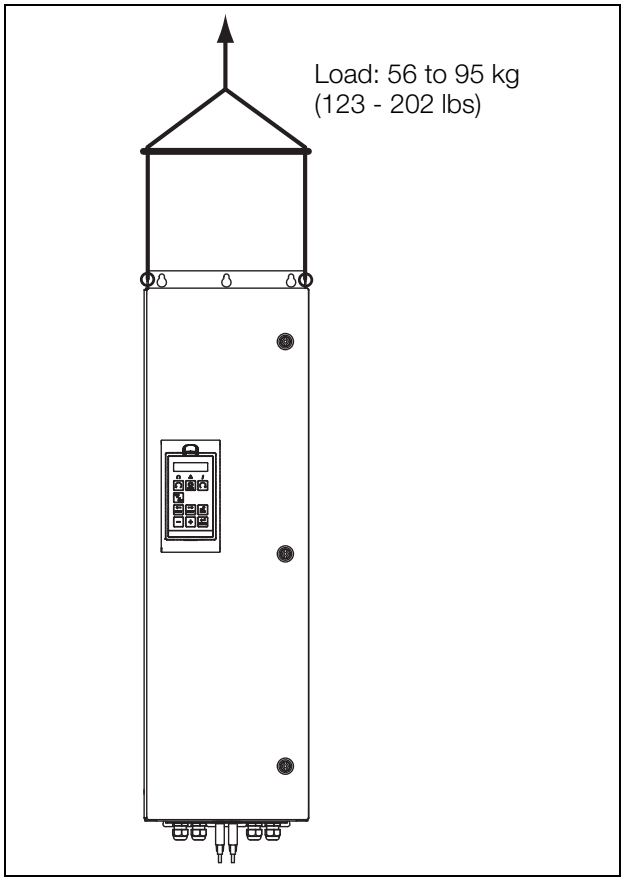

Fig. 2 Lifting AC drive model 45 KW to 200 KW.

Recommended for AC drive models 220 KW to 1K8 KW

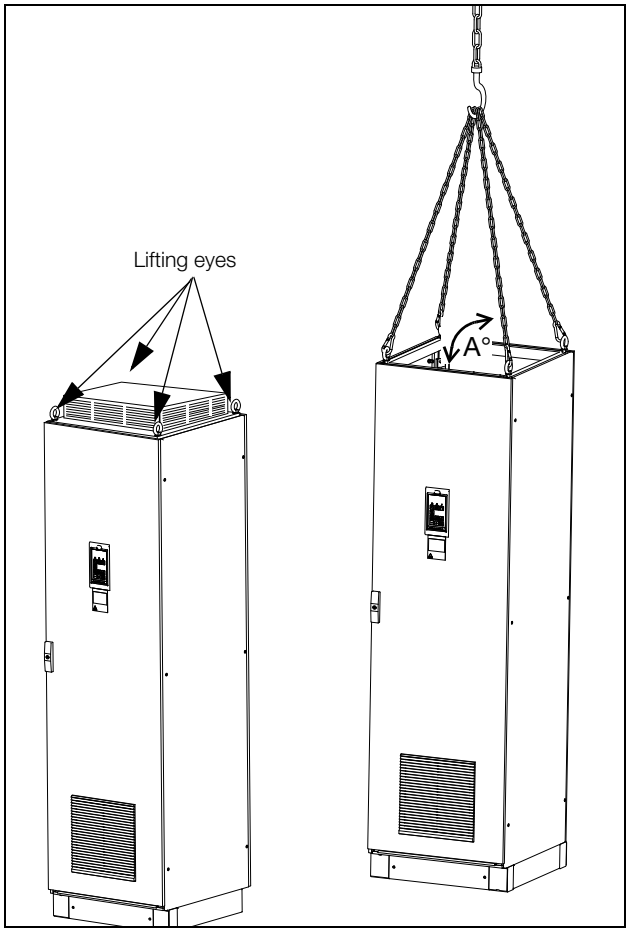

Fig. 3 Remove the roof unit and use the lifting eyes to lift single unit 600 mm (23.6 in) and 900 mm (35.4 in).

Single cabinet drives can be lifted/transported safely using the eye bolts supplied and lifting cables/chains as in illustration Fig. 3 above.
Depending on the cable/chain angle A (in Fig. 3), following loads are permitted:

Cable/chain angle A	Permitted load
45 °	4 800 N (1080 lbf)
60 °	6 400 N (1439 lbf)
90 °	13 600N (3057 lbf)

Regarding lifting instructions for other cabinet sizes, please contact Omron.

2.2 Stand-alone units

The AC drive must be mounted in a vertical position against a flat surface. Use the template (in the File archive on our homepage) to mark out the position of the fixing holes.

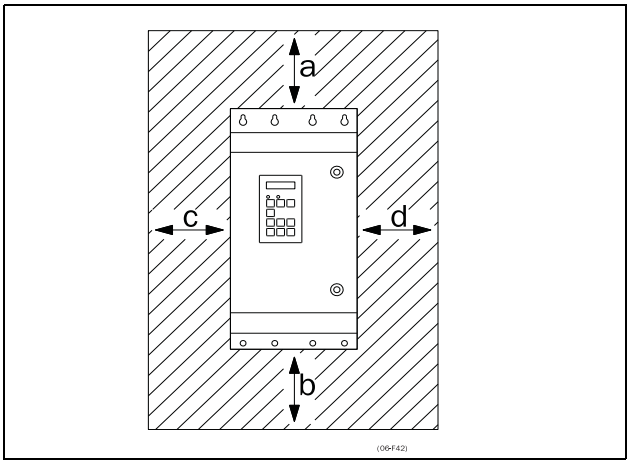

Fig. 4 AC drive mounting model 1P5 KW to 1K8 KW

2.2.1 Cooling

Fig. 4 shows the minimum free space required around the AC drive for the models 002 to 1K8 KW in order to guarantee adequate cooling. Because the fans blow the air from the bottom to the top it is advisable not to position an air inlet immediately above an air outlet.

The following minimum separation between two AC drives, or a AC drive and a non-dissipating wall must be maintained. Valid if free space on opposite side.

Table 5 Mounting and cooling

		Frame size B - FA, C2-FA2, C69-F69, C2(69)-D2(69) [mm(in)]	Frame size C2, D2, E2, F2 with IP21 top cover option [mm(in)]	220 KW-1K8 KW cabinet [mm(in)]
2xSX-V 2xside-by-side mm (in)	a	200 (7.9)	200 (7.9)	100 (3.9)
	b	200 (7.9)	200 (7.9)	0
	c	0	50 (1.97)	0
	d	0	50 (1.97)	0
3 or more SX-V units B/C/D/C2/ D2 side-by-side mm (in)	a	200 (7.9)	200 (7.9)	100 (3.9)
	b	200 (7.9)	200 (7.9)	0
	c	50 (1.97)	50 (1.97)	0
	d	50 (1.97)	50 (1.97)	0
3 or more SX-V units E/F/E2/ F2side-by-side mm (in)	a	200 (7.9)	200 (7.9)	100 (3.9)
	b	200 (7.9)	200 (7.9)	0
	c	100 (3.9	50 (1.97)	0
	d	100 (3.9)	50 (1.97)	0
SX-V-wall, wall-one side mm (in)	a	100 (3.9)	100 (3.9)	100 (3.9)
	b	100 (3.9)	100 (3.9)	0
	c	0	50 (1.97)	0
	d	0	50 (1.97)	0

NOTE: When a 220 KW to 1K8 KW model is placed between two walls, a minimum distance at each side of 200 mm (7.9 in) must be maintained.

2.2.2 Mounting schemes

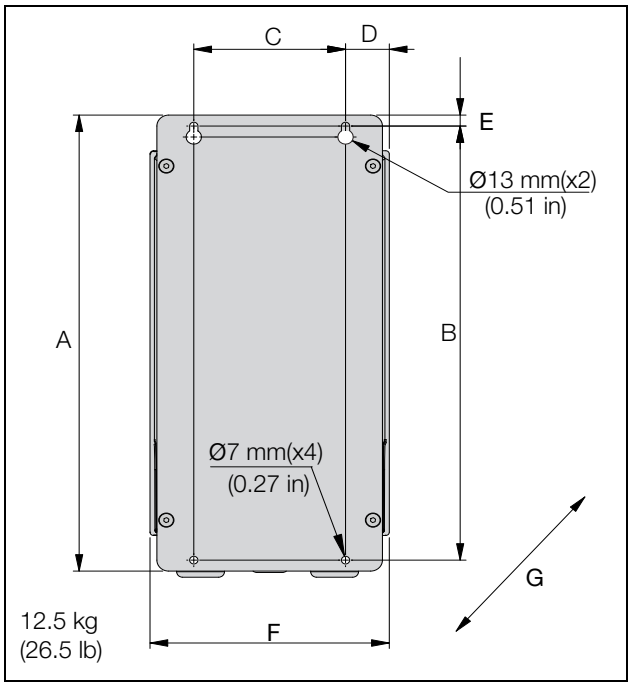

Fig. 5 Omron SX-V Model SX-D40P7 to D47P5 (Frame size B).

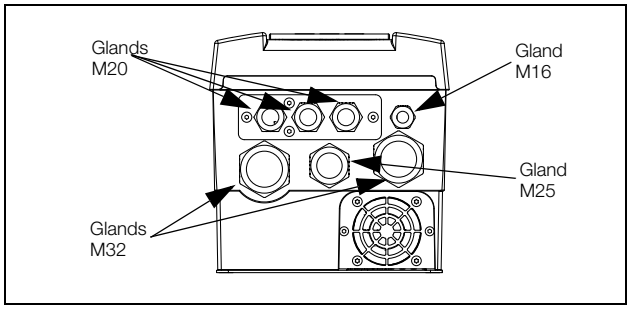

Fig. 6 Cable interface for mains, motor and communication, Omron SX-V Model SX-D0P7 to D7P5 (Frame size B).

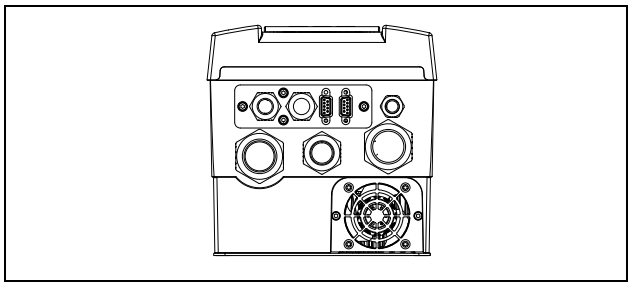

Fig. 7 Omron SX-V Model SX-D40P7 to D47P5 (Frame size B) example with optional CRIO interface and D-sub connectors.

Table 6 Dimensions connected to Fig. 5.

Frame size	Omron SX-V model	Dimensions in mm (in)						
		A	B	C	D	E	F	G (depth)
B	D40P7 - D47P5	416 (16.4)	396 (15.6)	128.5 (5.04)	37 (1.46)	10 (0.39)	202.6 (7.98)	203 (7.99)

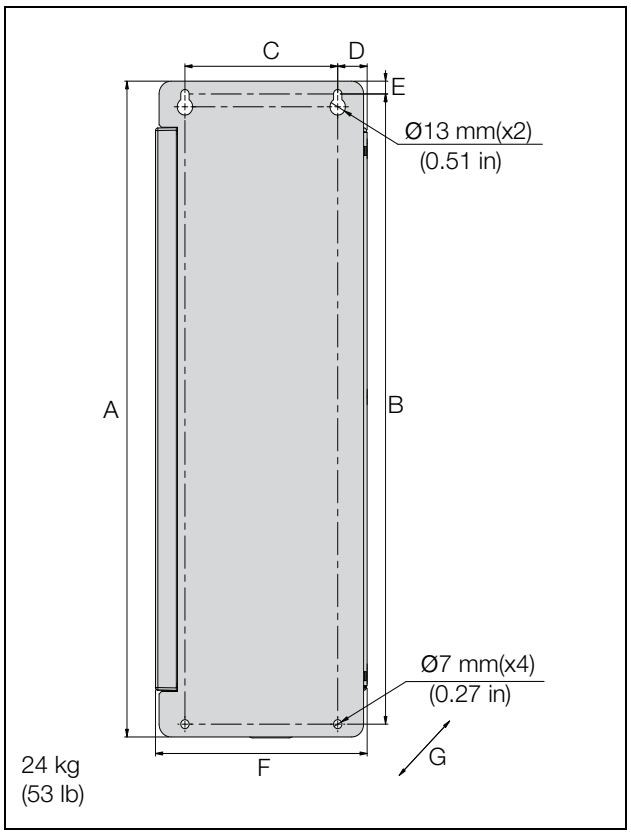

Fig. 8 Omron SX-V Model SX-D4011 to D4022 (Frame size C).

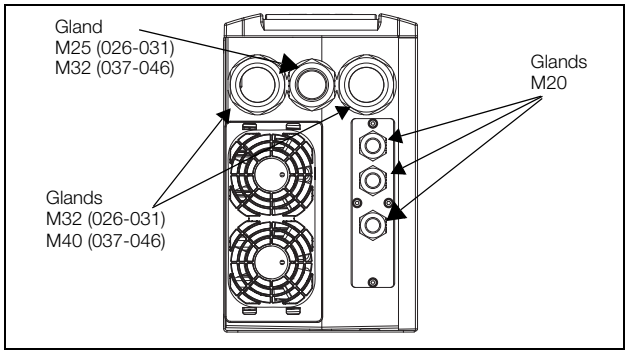

Fig. 9 Cable interface for mains, motor and communication, Omron SX-V Model SX-D4011 to D4022 (Frame size C).

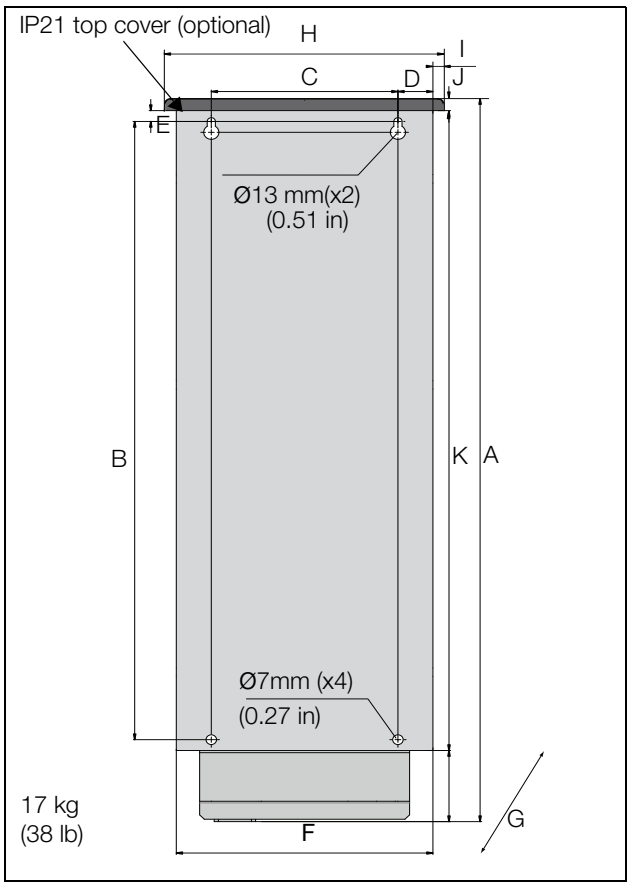

Fig. 10 Omron SX-V Model SX-A4011 to A4030 (Frame size C2), Model SX-A61P5 to A6022 (Frame size C2(69)), backside view.

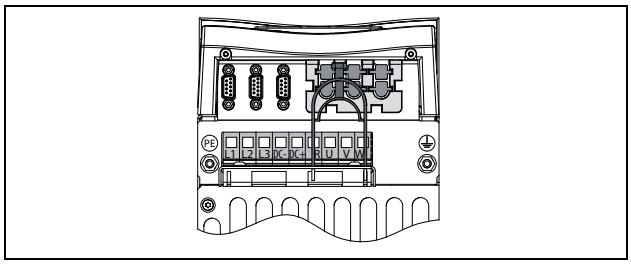

Fig. 11 Bottom view Omron SX-V Model SX-A4011 to A4030 (Frame size C2) Model SX-A61P5 to A6022 (Frame size C2(69)), with cable interface for mains, motor, DC+/DC-, brake resistor and control.

Table 7 Dimensions connected to Fig. 8 and Fig. 10.

Frame size	Omron SX-V model	Dimensions in mm (in)										
		A	B	C	D	E	F	G (depth)	H	I	J	K
C	D4011 - D4022	512 (20.2)	492 (19.4)	128.5 (5.04)	24.8 (0.95)	10 (0.39)	178 (7)	292 (11.5)	-	-	-	-
C2	A4011 - A4030	585.5 (23)	471 (18.5)	128.5 (5.04)	23.8 (0.91)	13 (0.51)	167 (7)	267 (10.5) IP21 282 (11.1)	196 (7.7)	10 (0.39)	23.5 (0.9)	496 (19.5)
C2(69)	A61P5 - A6022											

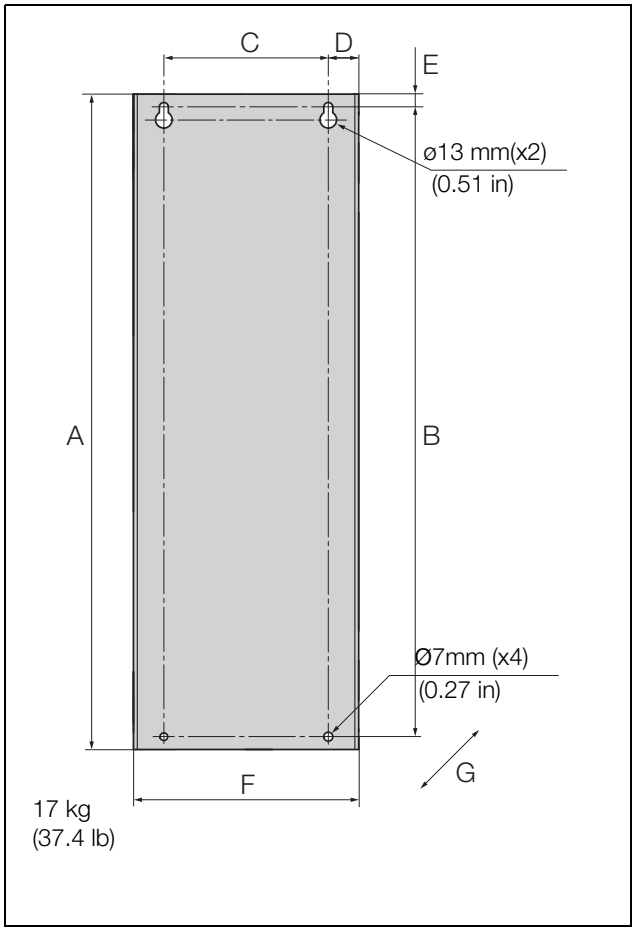

Fig. 12 Omron SX-V Model SX-A61P5 to A6022 (Frame size C69).

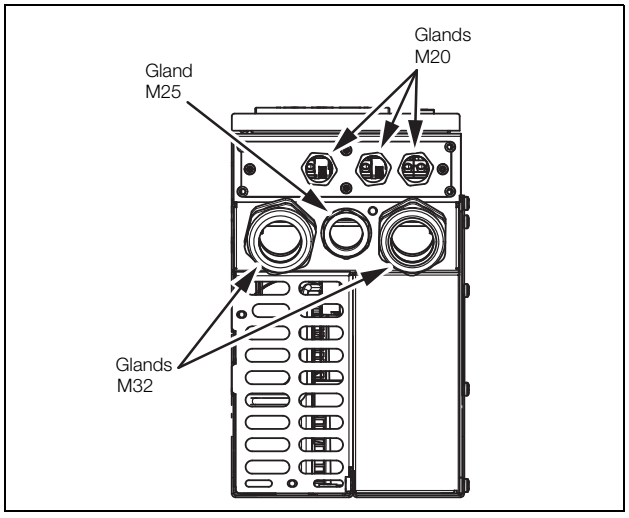

Fig. 13 Cable interface for mains, motor and communication, Omron SX-V Model SX-A61P5 to A6022 (Frame size C69).

Table 8 Dimensions connected to Fig. 12.

Frame size	Omron SX-V model	Dimensions in mm (in)						
		A	B	C	D	E	F	G (depth)
C69	A61P5 - A6022	512 (20.2)	492 (19.4)	128.5 (5.06)	24.8 (0.98)	10 (0.39)	178 (7.01)	314 (12.36) Excl. PPU G 291.5 (11.5)

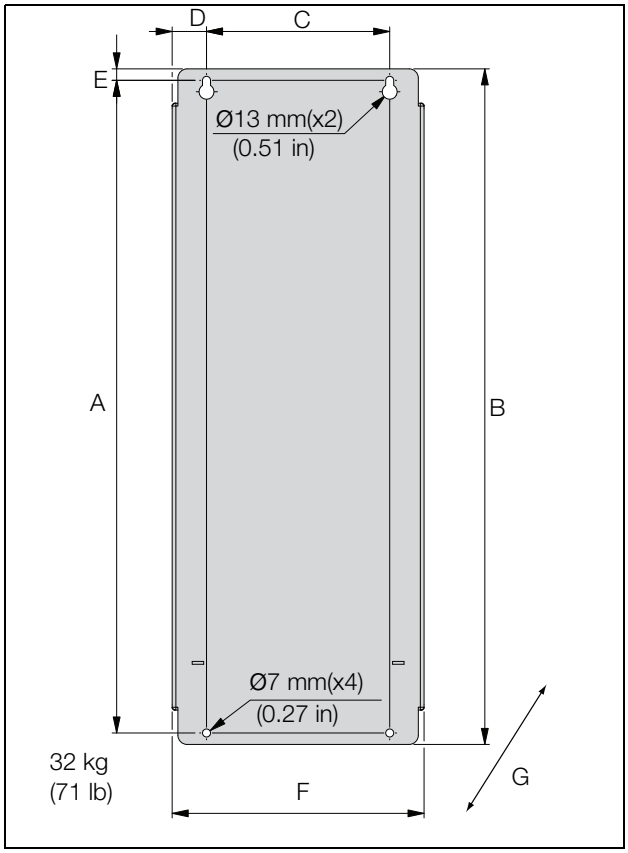

Fig. 14 Omron SX-V Model SX-D4030 to D4037(Frame size D), Model SX-D6030 to D6055, (Frame size D69).

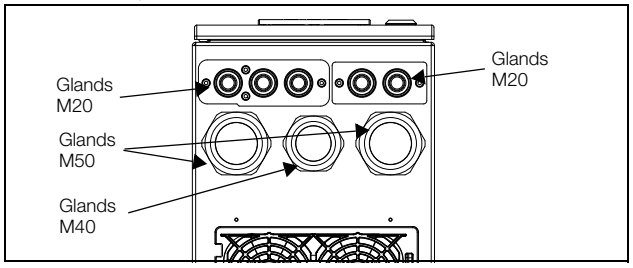

Fig. 15 Cable interface for mains, motor and communication, Omron SX-V Model SX-D4030 to D4037 (Frame size D), Model SX-D6030 to D6055 (Frame size D69).

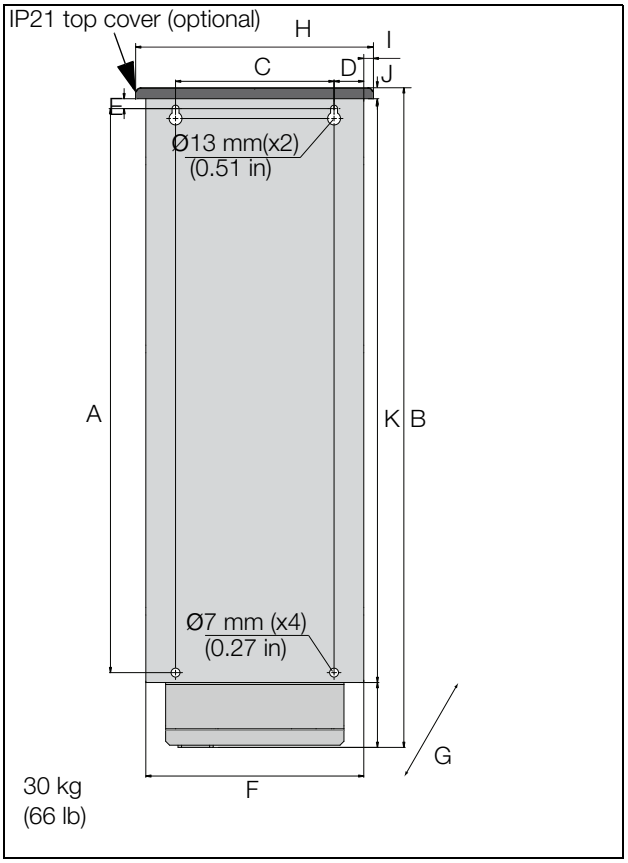

Fig. 16 Omron SX-V Model SX-A403072 to A4055 (Frame size D2), Model SX-A6030 to A6055 (Frame size D2(69)), backside view.

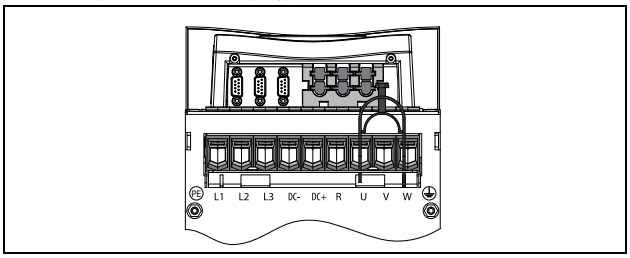

Fig. 17 Bottom view Omron SX-V Model SX-A403772 to SX-A4055 (Size D2), Model SX-A6030 to A6055 (Frame size D2(69)), with cable interface for mains, motor, DC+/DC-, brake resistor and control.

NOTE: Glands for size B, C, D, C69 and D69 are available as option kit.

Table 9 Dimensions connected to Fig. 14 and Fig. 16.

Frame size	Omron SX-V model	Dimensions in mm (in)										
		A	B	C	D	E	F	G (depth)	H	I	J	K
D	D4030 - D4037	570 (22.4)	590 (23.2)	160 (6.3)	30 (0.9)	10 (0.39)	220 (8.7)	295 (11.6)	-	-	-	-
D69	A6030 - A6055											
D2	A403772 - A4055	570 (22.4)	669.5 (26.3)	160 (6.3)	30 (0.9)	13 (0.51)	220 (8.7)	291 (11.5) IP21 - 307 (12.1)	240 (9.5)	10 (0.39)	12.5 (0.47)	590 (23.2)
D2(69)	D6030 - D6055											

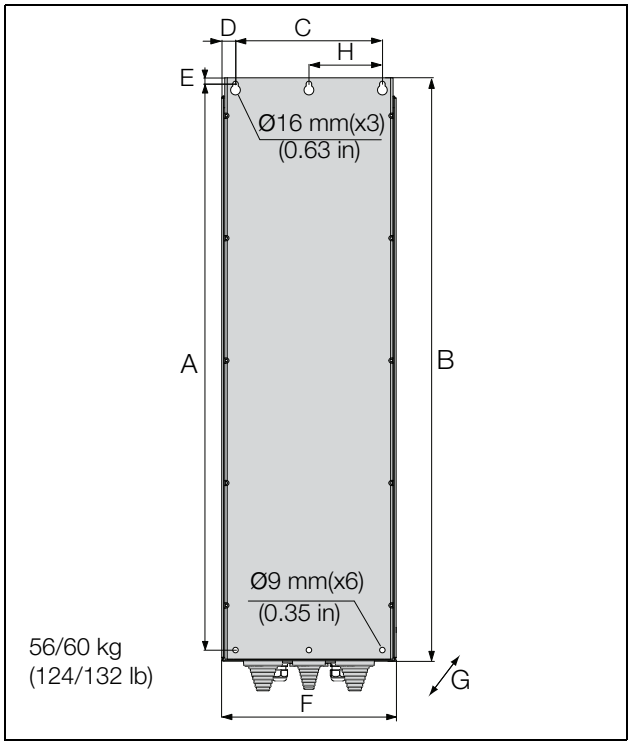

Fig. 18 Omron SX-V Model SX-D4045 to D4090 (Frame size E).

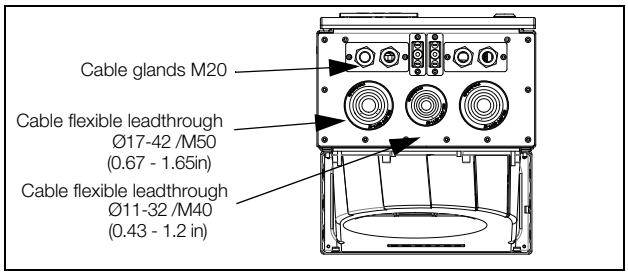

Fig. 19 Cable interface for mains, motor, DC+/DC-, brake resistor and communication, Omron SX-V Model SX-D4045 to D4090 (Frame size E).

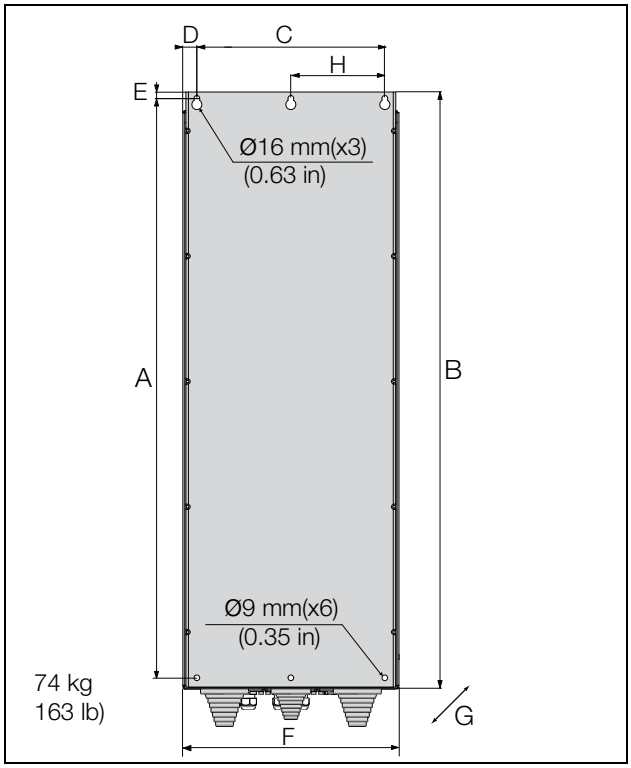

Fig. 20 Omron SX-V Model SX- D4110 to D4160 (Frame size F), Omron SX-V Model SX-D6075 to D6200 (Frame size F69).

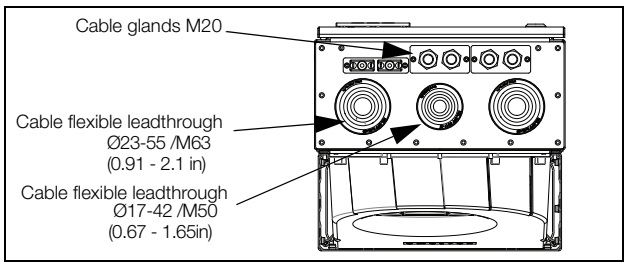

Fig. 21 Cable interface for mains, motor, DC+/DC-, brake resistor and communication, Omron SX-V Model SX- D4110 to D4160 (Frame size F), Omron SX-V Model SX-D6075 to D6200 (Frame size F69).

Table 10 Dimensions IP54 connected to Fig. 18 and Fig. 20.

Frame size	Omron SX-V model	Dimension in mm (in)							
		A	B	C	D	E	F	G (depth)	H
E	D4045 - D4090	925 (36.4)	950 (37.4)	240 (9.5)	22.5 (0.88)	10 (0.39)	284.5 (11.2)	314 (12.4)	120 (4.7)
F	D4110 to D4160	925 (36.4)	950 (37.4)	300 (11.8)	22.5 (0.88)	10 (0.39)	344.5 (13.6)	314 (12.4)	150 (5.9)
F69	D6075 to D6200	1065 (41.9)	1090 (42.9)						

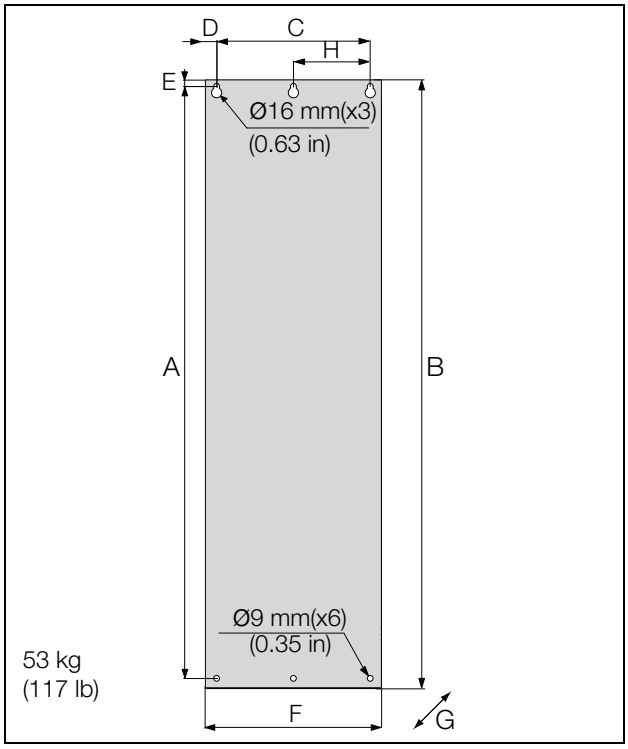

Fig. 22 Omron SX-V Model SX-D4075 to D4090 (Frame size E2).

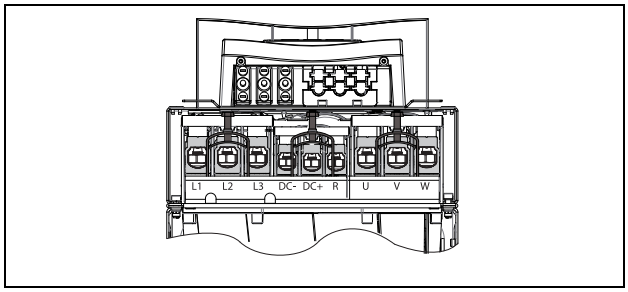

Fig. 23 Bottom view Omron SX-V Model SX-A4075 to A4160 (Frame size E2 and F2), with cable interface for mains, motor, DC+/DC-, brake resistor and control. (principle drawing).

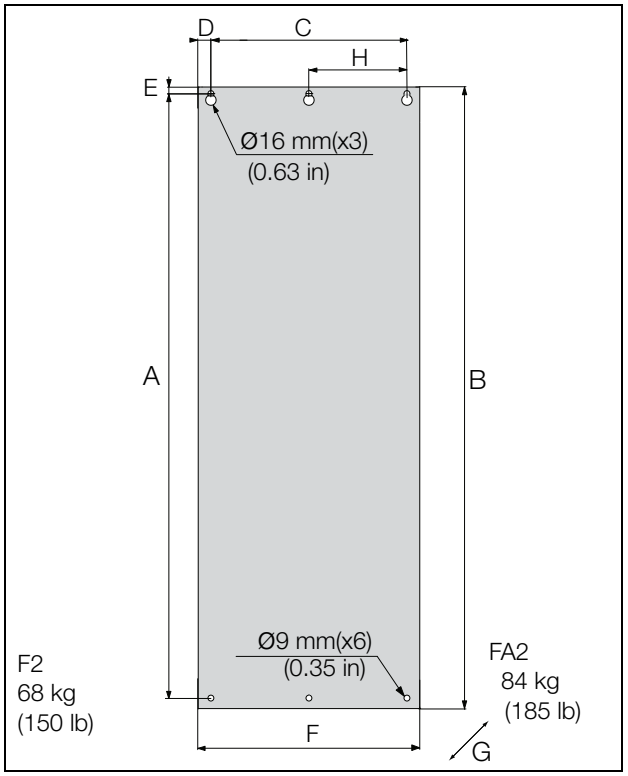

Fig. 24 Omron SX-V Model SX-A4110 to A4160 (Frame size F2) and SX-A4200 (Frame size FA2).

Table 11 Dimensions IP20 connected to Fig. 22 and Fig. 24.

Frame size	Omron SX-V model	Dimension in mm (in)							
		A	B	C	D	E	F	G (depth)	H
E2	A4075 - A4090	925 (36.4)	950 (37.4)	240 (9.5)	22.5 (0.88)	10 (0.39)	275 (10.8)	294 (11.6) IP21 - 323 (12.7)	120 (4.7)
F2	A4110 - A4160			300 (11.8)			335 (13.2)	294 (11.6) IP21 - 323 (12.7)	150 (5.9)
FA2	A4200	1065 (41.9)	1090 (42.9)					306 (12) IP21 - 323 (12.7)	

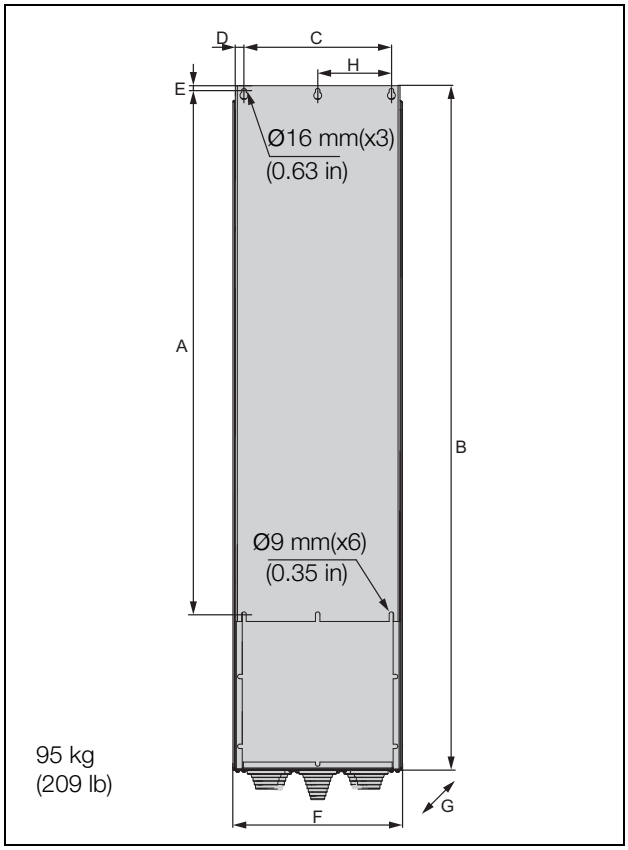

Fig. 25 Omron SX-V Model SX-D4200 Frame size FA).

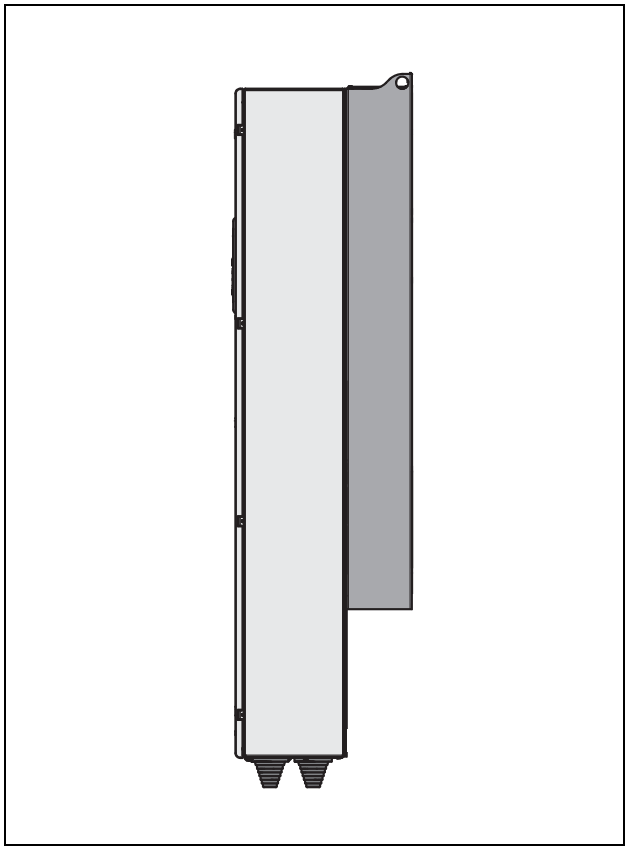

Fig. 27 Side view Omron SX-V Model SX-D4200 (Frame size FA).

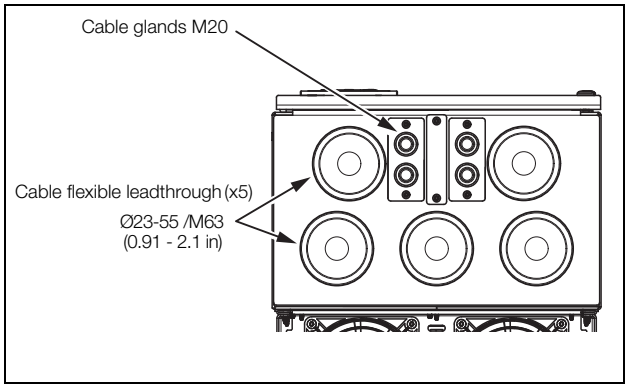

Fig. 26 Cable interface for mains, motor, DC+/DC-, brake resistor and communication, Omron SX-V Model SX-D4200 (Frame size FA).

Table 12 Dimensions IP54 connected to Fig. 25.

Frame size	Omron SX-V model	Dimension in mm (in)							
		A	B	C	D	E	F	G (depth)	H
FA	SX-D4200	1055 (41.5)	1395 (54.9	300 (11.8)	38 (1.5)	32 (1,26)	345 (13.6)	365 (14.4)	157 (6.18)

2.3 Cabinet mounting

2.3.1 Cooling

If the variable speed drive is installed in a cabinet, the rate of airflow supplied by the cooling fans must be taken into consideration.

Frame	Omron SX-V Model	Flow rate m^3/h (ft^3/min)
B	D40P7 - D47P5	75 (144)
C - C2	D4011 - D4015	120 (171)
C - C2	A4018 - A4030	170 (100)
C69	D61P5 - D6022	170 (100)
C2(69)	A61P5 - A6022	170 (100)
D - D2	A4022 - A4030	170 (100)
D69	D6030 - D6055	170 (100)
D2(69)	D6030 - D6055	170 (100)
E - E2	D4045 - D4090	510 (300)
F - F2	D4110 - D4160	800 (471)
FA - FA2	A4200 - D4200	1020 (600)
F69	D6090 - D6200	800 (471)
H	A4220 - A4250	1600 (942)
H69	A6250 - A6400	
I	A4315 - A4400	2400 (1413)
I69	A6450 - A6600	
J	A4450 - A4500	3200 (1883)
J69	A6630 - A6800	
KA	A4630 - A4710	4000 (2354)
KA69	A6900 - A61K0	
K	A4800	4800 (2825)
K69	A61K2	
L	A4900	5600 (3296)
L69	A61K4	
M	A41K1	6400 (3767)
M69	A61K6	
N	A41K2	7200 (4238)
N69	A61K8	
O	A41K4	8000 (4709)
O69	A62K0	
P69	A62K2	8800 (5179)
Q69	A62K4	9600 (5650)
R69	A62K6	10400 (6121)
S69	A62K8	11200 (6592)
T69	A63K0	12000 (7063)

NOTE: For the models A4450/A6630 to A63K0 the mentioned amount of air flow should be divided equally over the cabinets.

2.3.2 Recommended free space in front of cabinet

All cabinet mounted AC drives are designed in modules, so called PEBBs. These PEBBs can be folded out to be replaced. To be able to remove a PEBB in the future, we recommend 1.30 meter (39.4 in) free space in front of the cabinet, see Fig. 28.

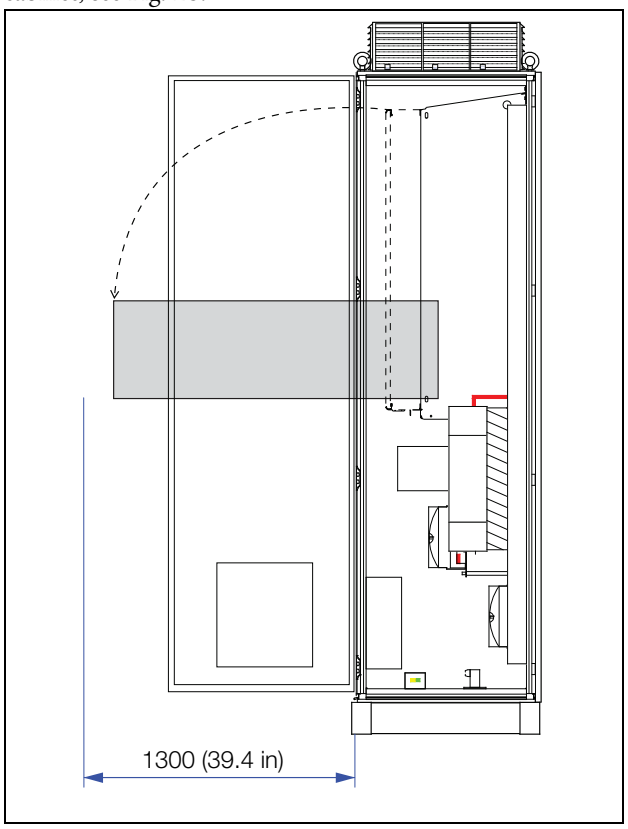

Fig. 28 Recommended free space in front of the cabinet mounted AC drive.

2.3.3 Mounting schemes, cabinets

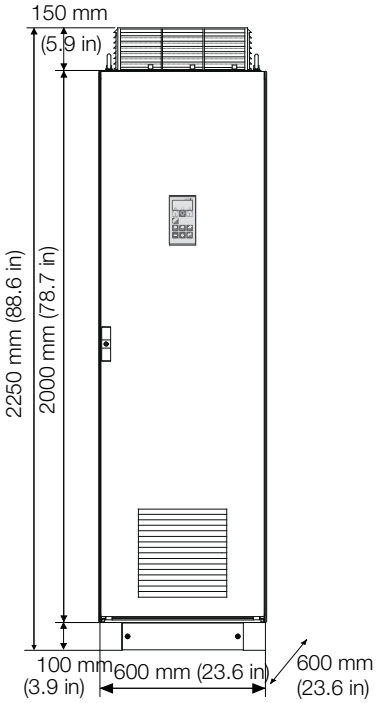

Omron SX-V: Model D4220 to D4250
(Frame sizes G and H)
Omron SX-V: Model D6250 to D6400
(Frame size H69)

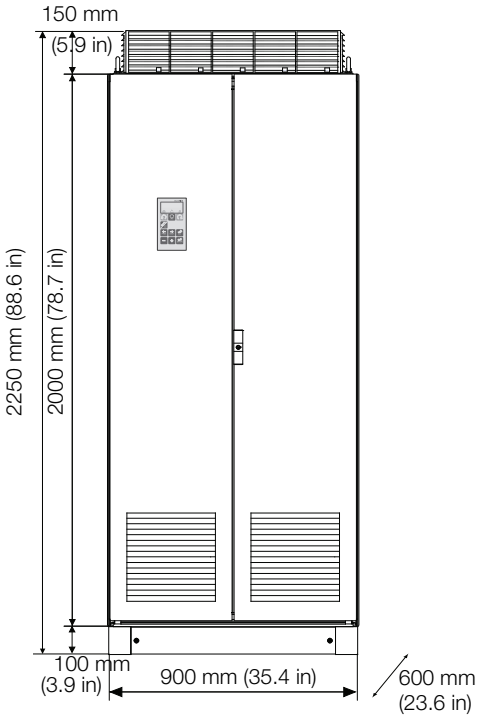

Omron SX-V: Model D4315 to D4400
(Frame size I)
Omron SX-V: Model D6450 to D6600
(Frame size I69)

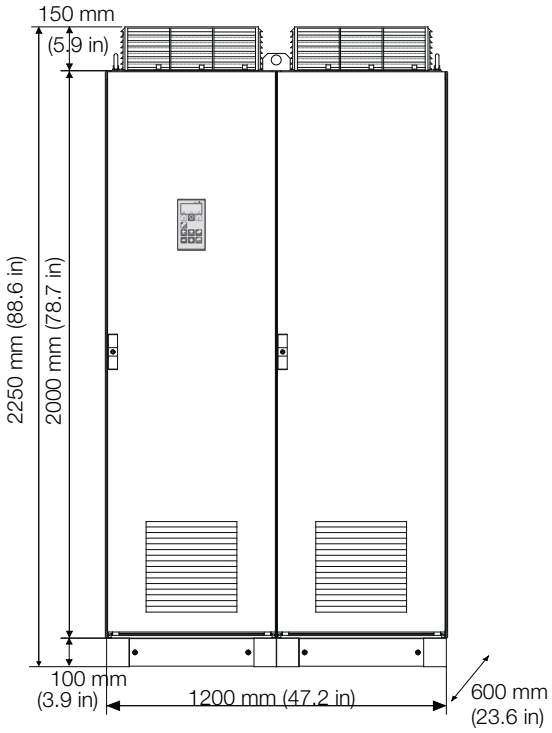

Omron SX-V: Model D4450 to D4500
(Frame size J)
Omron SX-V: Model D6630 to D6800
(Frame size J69)

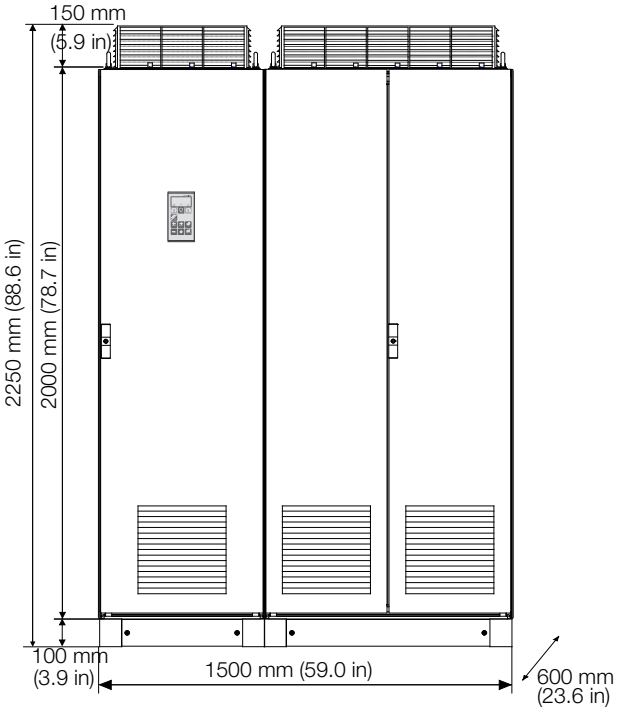

Omron SX-V: Model D4630 to D4710
(Frame size KA)
Omron SX-V: Model D6900 to D61K0
(Frame size KA69)

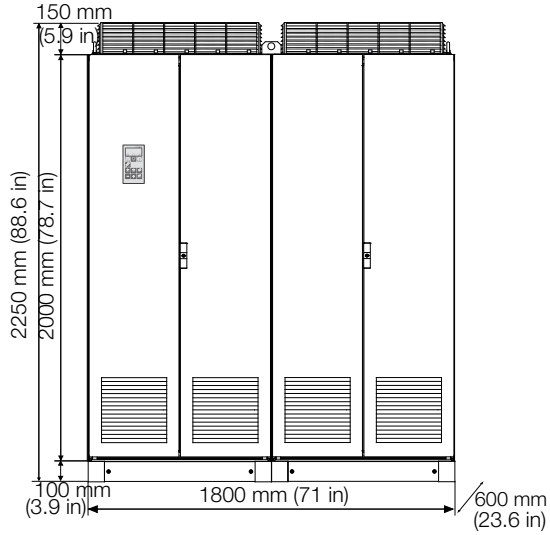

Omron SX-V: Model D4800 (Frame size K)
Omron SX-V: Model D61K2 (Frame size K69)

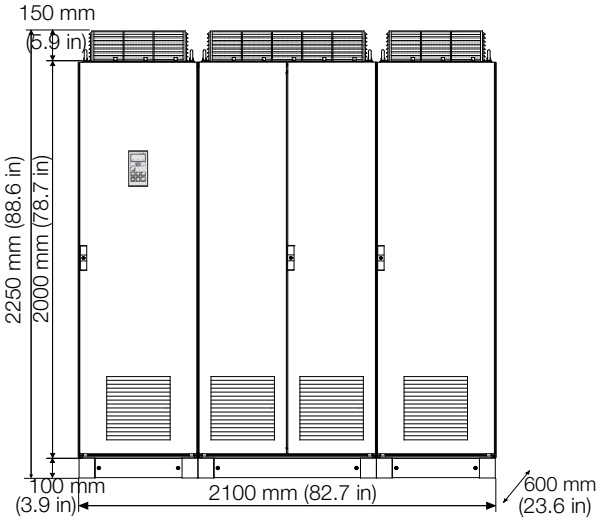

Omron SX-V: Model D4900 (Frame size L)
Omron SX-V: Model D61K4 (Frame size L69)

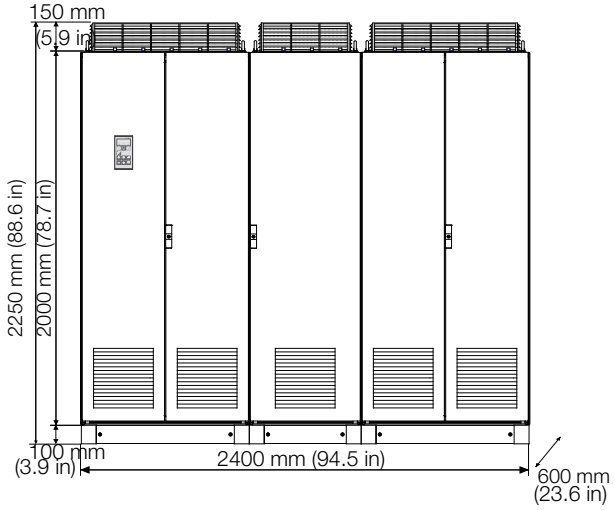

Omron SX-V: Model D41K1 (Frame size M)
Omron SX-V: Model D61K6 (Frame size M69)

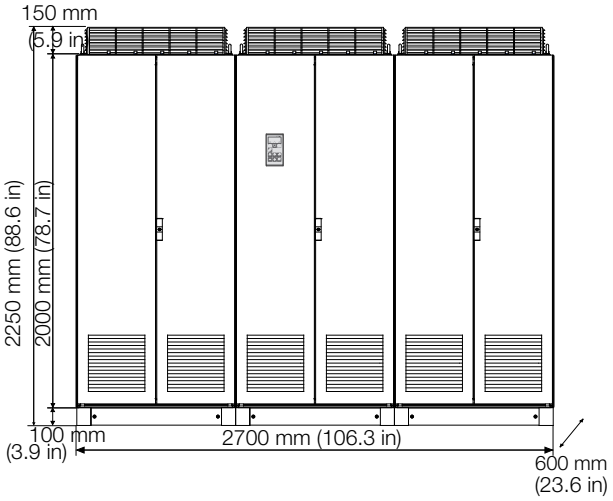

Omron SX-V: Model D41K2 (Frame size N)
Omron SX-V: Model D61K8 (Frame size N69)

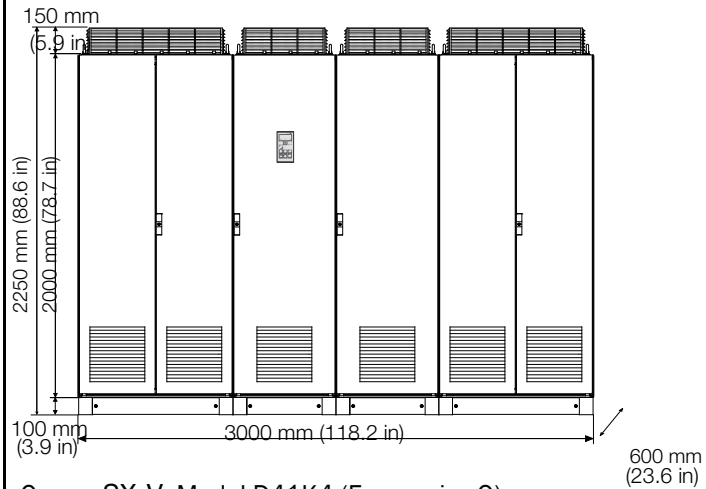

Omron SX-V: Model D41K4 (Frame size O)
Omron SX-V: Model D62K0 (Frame size O69)

3. Installation

The description of installation in this chapter complies with the EMC standards and the Machine Directive.

Select cable type and screening according to the EMC requirements valid for the environment where the AC drive is installed.

3.1 Before installation

Read the following checklist and prepare for your application before installation.

- Local or remote control.
- Long motor cables (>100m (> 330 ft)), refer to section Long motor cables page 31.
- Functions used.
- Suitable AC drive size in proportion to the motor/application.

If the AC drive is temporarily stored before being connected, please check the technical data for environmental conditions. If the AC drive is moved from a cold storage room to the room where it is to be installed, condensation can form on it. Allow the AC drive to become fully acclimatised and wait until any visible condensation has evaporated before connecting the mains voltage.

3.1.1 Remove/open front cover

Frame sizes B - FA (IP54)

Remove/open the front cover to access the cable connections and terminals. On Frame size B and C loosen the four screws and remove the cover. On Frame size D and up unlock the hinged cover with the key and open it. On Frame size FA loosen the three screws on the hinged cover and open it.

Frame size C2 - F2 and FA2 (IP20/21)

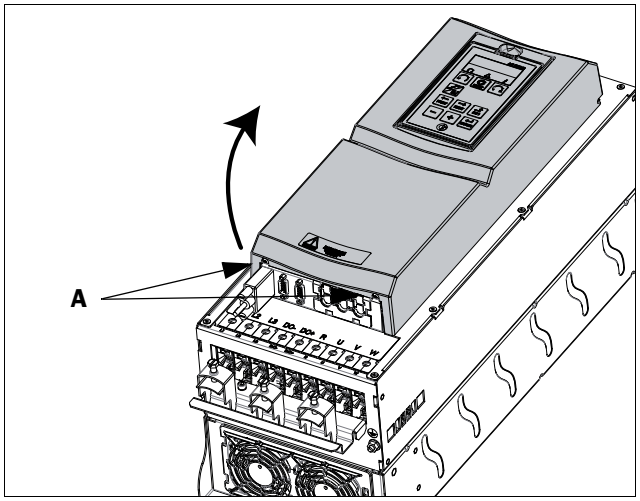

Fig. 29 Remove the front cover on frame size C2 - F2 and FA2 (principle drawing).

To be able to access all cable connections and terminals, first open and remove the front cover in following order.

- Loosen the two screws A (see Fig. 29) at the bottom of the cover a couple of turns (you do not have to remove the screws).
- Swing out the lower part of the cover a bit and remove the cover downwards. Be careful, don't swing out the cover too much as this could damage the “lips” at the upper hinges.
  Now it is easy to access all terminals.

3.1.2 Remove/open the lower front cover on Frame size E2, F2 and FA2 (IP20/21)

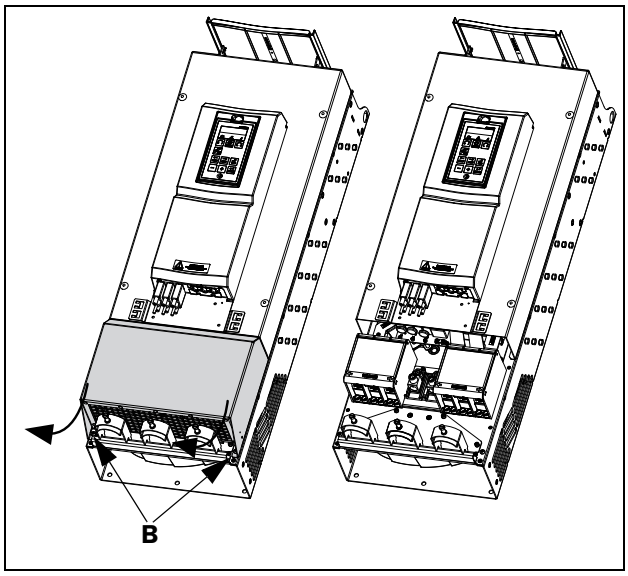

Fig. 30 Loosen the two screws and remove the lower cover (principle drawing)

In order to access the mains, motor, DC+/DC- and brake terminals, remove the lower cover in following order

- Loosen the two screws B (see Fig. 30).
- Pull down the cover a bit and lift it away.

3.2 Cable connections for small and medium frame sizes

IP54 - SX-D41P5 to D4037 (Frame sizes B, C and D)
IP54-SX-D61P5 to D6055 (Frame sizes C69 and D69)
IP20/21 - SX-A4011 to A4200 (Frame sizes C2, D2, E2, F2 and FA2)
IP20/21 - SX-A61P5 to A6055 (Frame sizes C2(69) and D2(69))

3.2.1 Mains cables

Dimension the mains and motor cables according to local regulations. The cable must be able to carry the AC drive load current.

Recommendations for selecting mains cables

- To fulfil EMC purposes it is not necessary to use screened mains cables.
- Use heat-resistant cables, +75 °C (167 °F) or higher.
- Dimension the cables and fuses in accordance with local regulations and the nominal input current of the drive See table 67, page 255.
- PE conductor cross-sectional area shall for phase cable size < 16 mm^2 (6 AWG) be >10 mm2 Cu (16 mm^2 Al) or a second PE conductor with same area as original PE conductor,
  for cable size above 16mm^2 (6 AWG) but smaller or equal to 35mm^2 (2 AWG) the PE conductor cross-sectional area shall be at least 16mm^2 (6 AWG).
  For cables >35mm^2 (>2 AWG) the PE conductor cross-sectional area should be at least 50% of the used phase conductor.
  When the PE conductor in the used cable type is not in accordance with the above mentioned cross-sectional area requirements, a separate PE conductor should be used to establish this.
- The litz ground connection see fig. 42, is only necessary if the mounting plate is painted. All the AC drives have an unpainted back side and are therefore suitable for mounting on an unpainted mounting plate.

Connect the mains cables according to fig. 31 to 39. The AC drive has as standard a built-in RFI mains filter that complies with category C3 which suits the Second Environment standard.

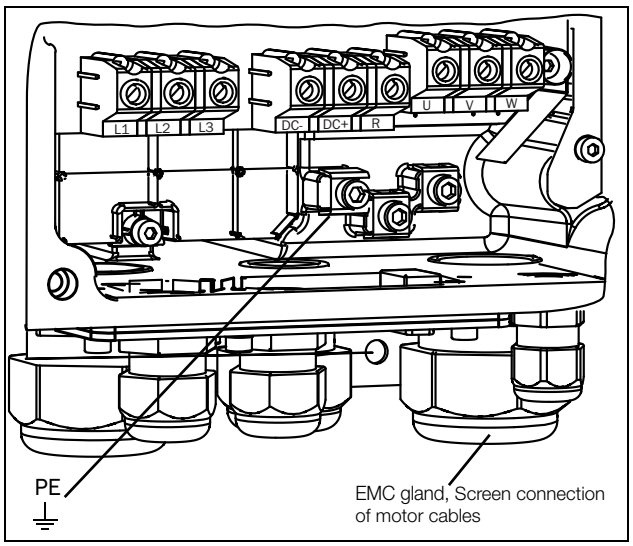

Fig. 31 Mains and motor connections, model D41P5 to D47P5, frame size B.

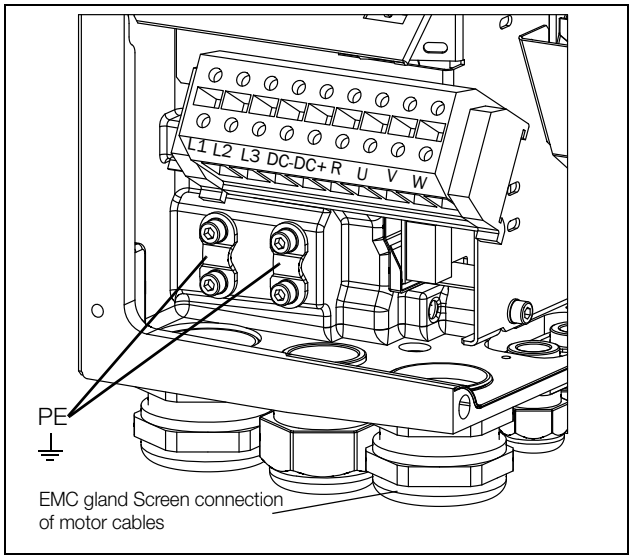

Fig. 32 Mains and motor connections, model D4011 to D4022, frame size C.

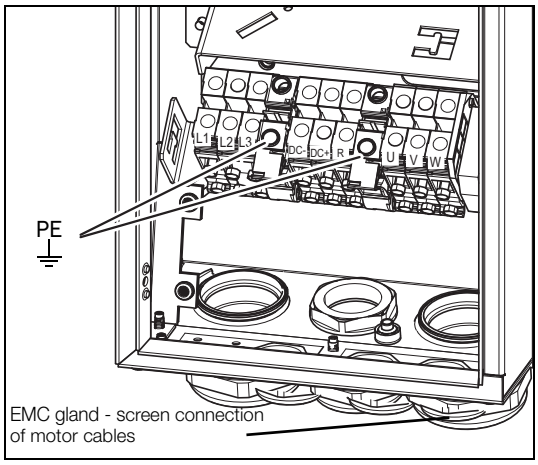

Fig. 33 Mains and motor connections, model D61P5 to D6022, frame size C69.

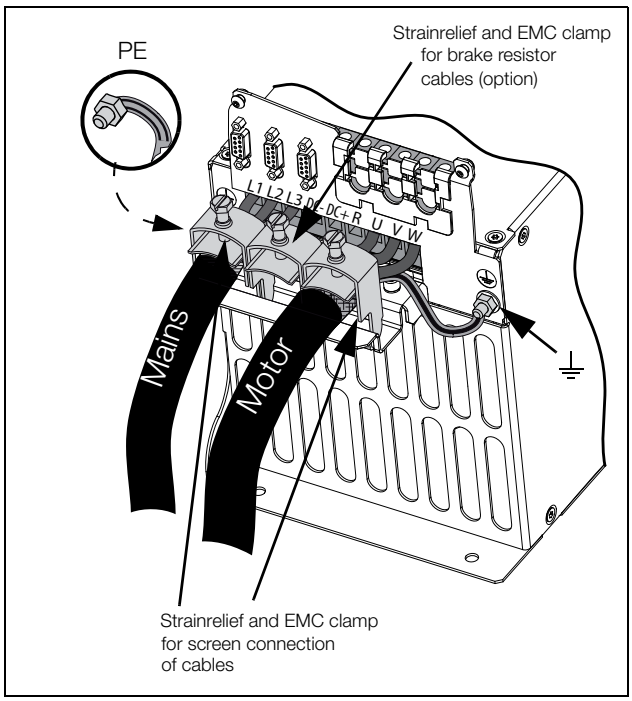

Fig. 34 Mains and motor connections model A4011 to A4030, frame size C2 and model A61P5 to A6022 frame size C2(69).

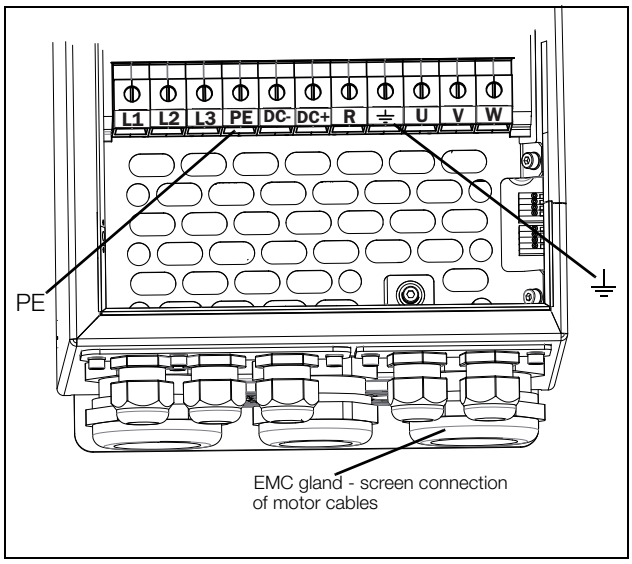

Fig. 35 Mains and motor connection, model D4030 to D4037, frame size D and model D6030 to D6055 frame size D69.

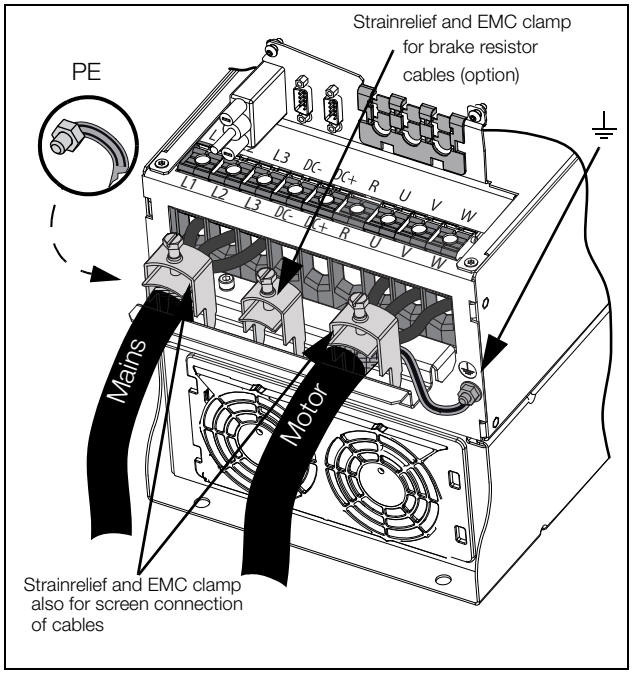

Fig. 36 Mains and motor connections model A403772 to A4055, frame size D2 and model A6030 to A6055 frame size D2(69).

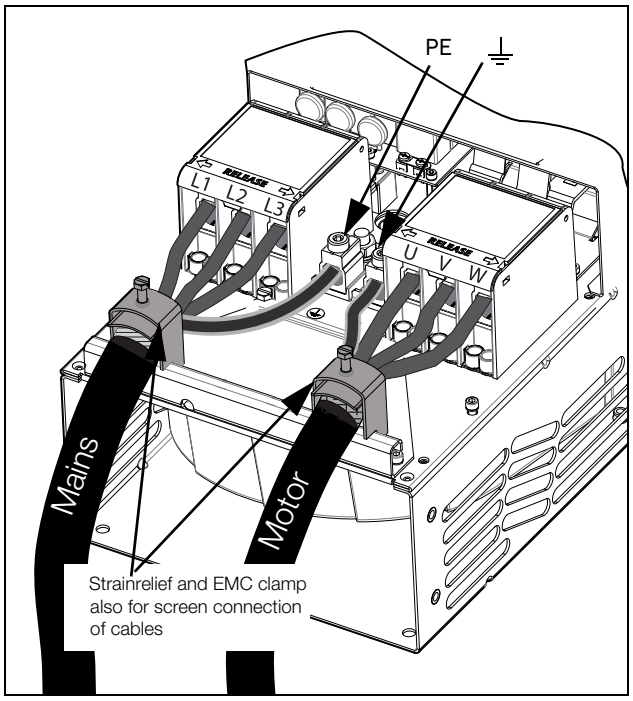

Fig. 37 Mains and motor connections model D4075 to D4160 (frame sizes E2 and F2) (principle drawing).

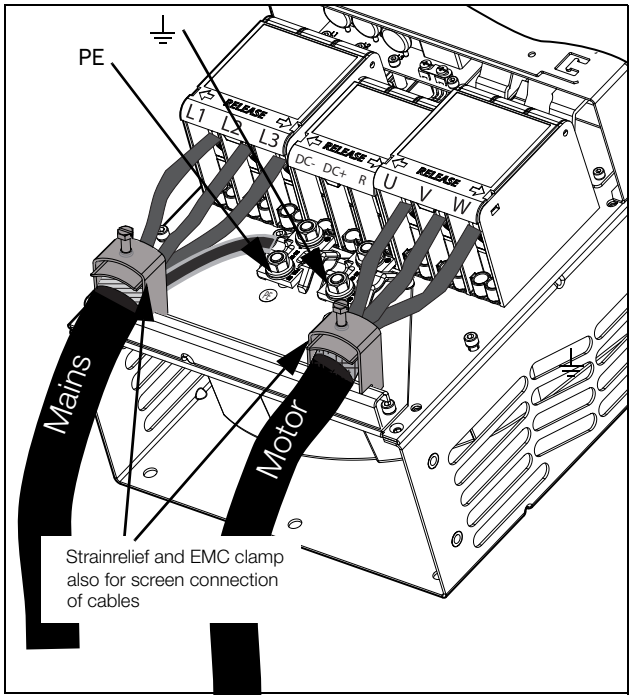

Fig. 38 Mains and motor connections model D4075 to D4160 (frame sizes E2 and F2) with the optional terminals for DC-, DC+ and Brake (principle drawing)

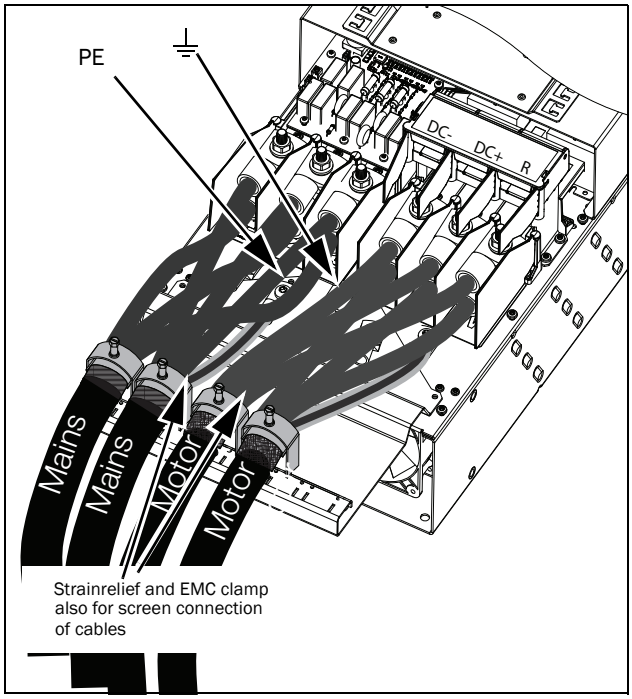

Fig. 39 Mains and motor connections model A4200-E3 (frame size FA2) with the optional terminals for DC-, DC+ and Brake (principle drawing)

Table 13 Mains and motor connections

L1,L2,L3 PE	Mains supply, 3 -phase Safety earth (protected earth)
⏚ U, V, W	Motor earth Motor output, 3-phase
DC-,DC+,R	Brake resistor, DC-link connections (optional)

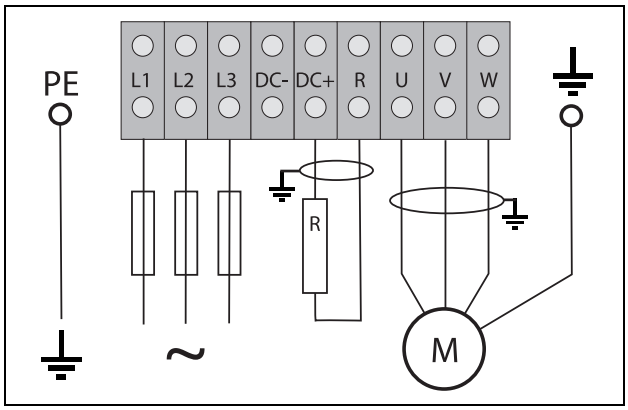

Fig. 40 Wiring example showing Protective earth, Motor earth and Brake Resistor connection

NOTE: The Brake and DC-link Terminals are only fitted if the DC+/DC- option or Brake Chopper Option is built-in.

WARNING!
The Brake Resistor must be connected between terminals DC+ and R.

WARNING!
In order to work safely, the mains earth must be connected to PE and the motor earth to ⏚.

3.2.2 Motor cables

To comply with the EMC emission standards the AC drive is provided with a RFI mains filter. The motor cables must also be screened and connected on both sides. In this way a so-called "Faraday cage" is created around the AC drive, motor cables and motor. The RFI currents are now fed back to their source (the IGBTs) so the system stays within the emission levels.

Recommendations for selecting motor cables

- Use screened cables according to specification in table 14. Use symmetrical shielded cable; three phase conductors and a concentric or otherwise symmetrically constructed PE conductor, and a shield.
- PE conductor cross-sectional area shall for phase cable size < 16 mm^2 (6 AWG) be >10 mm^2 Cu (16 mm2 Al) or use a second PE conductor with same area as original PE conductor.
  For cable size above 16mm^2 (6 AWG) but smaller or equal to 35mm^2 (2 AWG) the PE conductor cross-sectional area shall be at least 16mm^2 (6 AWG).
  For cables >35mm^2 (2 AWG) the PE conductor cross-sectional area should be at least 50% of the used phase conductor.
  When the PE conductor in the used cable type is not in accordance with the above mentioned cross-sectional area requirements, a separate PE conductor should be used to establish this.
- Use heat-resistant cables, +75 °C (167 °F) or higher.
- Dimension the cables in accordance with the rated current of the motor.
- Keep the motor cable between AC drive and motor as short as possible.
- The screening must be connected with a large contact surface of preferable 360° and always at both ends, to the motor housing and the AC drive housing. When painted mounting plates are used, do not be afraid to scrape away the paint to obtain as large contact surface as possible at all mounting points for items such as saddles and the bare cable screening. Relying just on the connection made by the screw thread is not sufficient.

NOTE: It is important that the motor housing has the same earth potential as the other parts of the machine.

- The litz ground connection, see fig. 42, is only necessary if the mounting plate is painted. All the AC drives have an unpainted back side and are therefore suitable for mounting on an unpainted mounting plate.

Connect the motor cables according to U - U, V - V and W - W, see Fig. 31, to Fig. 39.

NOTE: The terminals DC-, DC+ and R are options.

Switches between the motor and the AC drive

If the motor cables are to be interrupted by maintenance switches, output coils, etc., it is necessary that the screening is continued by using metal housing, metal mounting plates, etc. as shown in the Fig. 42.

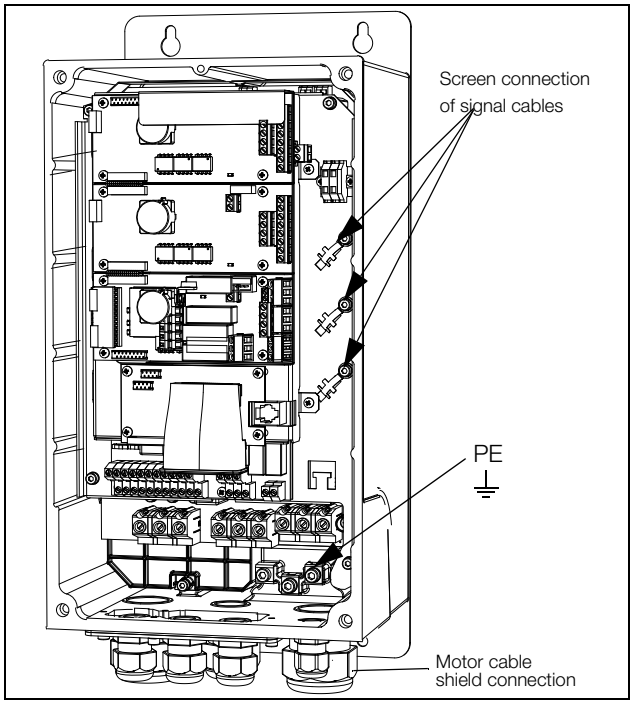

Fig. 41 Screen connection of cables.

Pay special attention to the following points:

- If paint must be removed, steps must be taken to prevent subsequent corrosion. Repaint after making connections!
- The fastening of the whole AC drive housing must be electrically connected with the mounting plate over an area which is as large as possible. For this purpose the removal of paint is necessary. An alternative method is to connect the AC drive housing to the mounting plate with as short a length of litz wire as possible.
- Try to avoid interruptions in the screening wherever possible.
- If the AC drive is mounted in a standard cabinet, the internal wiring must comply with the EMC standard. Fig. 42 shows an example of a AC drive built into a cabinet.

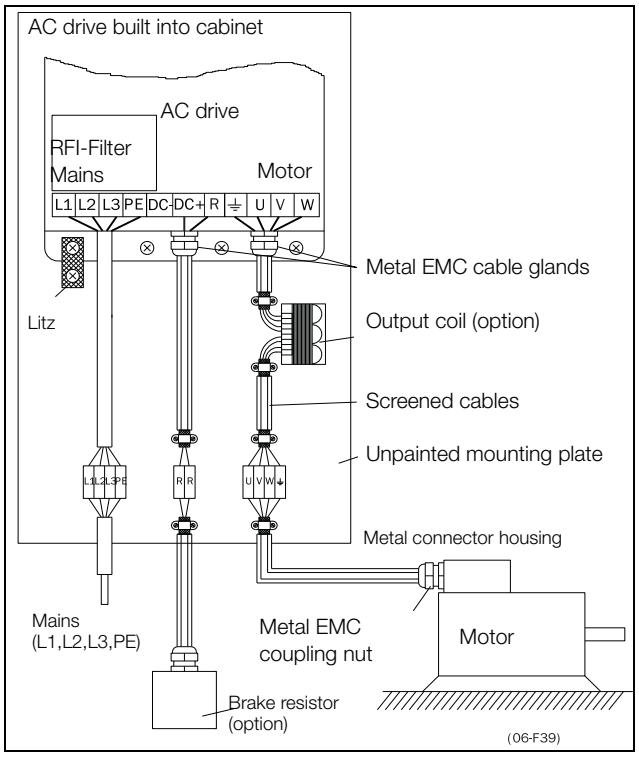

Fig. 42 AC drive in a cabinet on a mounting plate

Fig. 43 shows an example when there is no metal mounting plate used (e.g. if IP54 AC drives are used). It is important to keep the "circuit" closed, by using metal housing and cable glands.

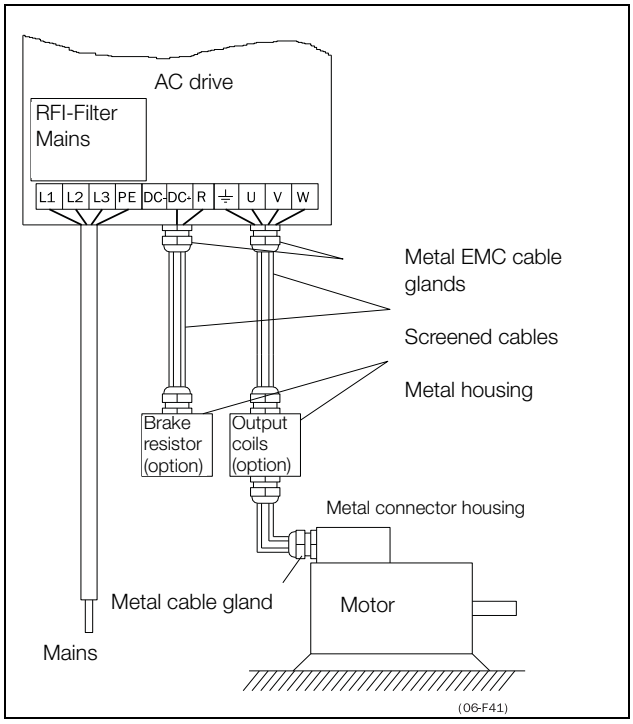

Fig. 43 AC drive as stand alone

Connect motor cables

1. Remove the cable interface plate from the AC drive housing.
2. Put the cables through the glands.
3. Strip the cable according to Table 15.
4. Connect the stripped cables to the respective motor terminal.
5. Put the cable interface plate in place and secure with the fixing screws.
6. Tighten the EMC gland with good electrical contact to the motor and brake chopper cable screens.

Placing of motor cables

- Separate the power cables (AC drive, soft starter, output coils, filters, magnetic switches, etc.) from the signal cables (relay control circuit, PLC, sensors, control PCBs, electronics, etc.).
- Keep the control cables as far from the power cables as possible.
- If power cables and control cables must be laid close to each other, try to ensure that they do not run parallel, at least for a distance of no more than 300 mm (12 in). If necessary, use a cable tray with a division or stack the cable trays.
- Ensure that where power cables and control cables cross, they do so at 90° to each other.

Long motor cables

If the connection to the motor is longer than 100 m (330 ft)(for powers below 7.5 kW (10.2 hp)) please contact Omron), it is possible that capacitive current peaks will cause tripping at overcurrent. Using output coils can prevent this. Contact the supplier for appropriate coils.

Switching in motor cables

Switching in the motor connections is not advisable. In the event that it cannot be avoided (e.g. emergency or maintenance switches) only switch if the current is zero. If this is not done, the AC drive can trip as a result of current peaks.

3.3 Connection of motor and mains cables for larger frame sizes

IP54 - SX-V D4045 to D4160 (Frame sizes E - F) and
SX-V D4200 (Frame size FA) and
SX-V D6075 to D6200 (Frame size F69)
IP20 - SX-V D4220 and up (Frame sizes G and up) and
SX-V D6250 and up (Frame sizes H69 and up).

Omron SX-V D4045 to D4160
Omron SX-V D6075 to D6200

To simplify the connection of thick motor and mains cables to the AC drive, the cable interface plate can be removed.

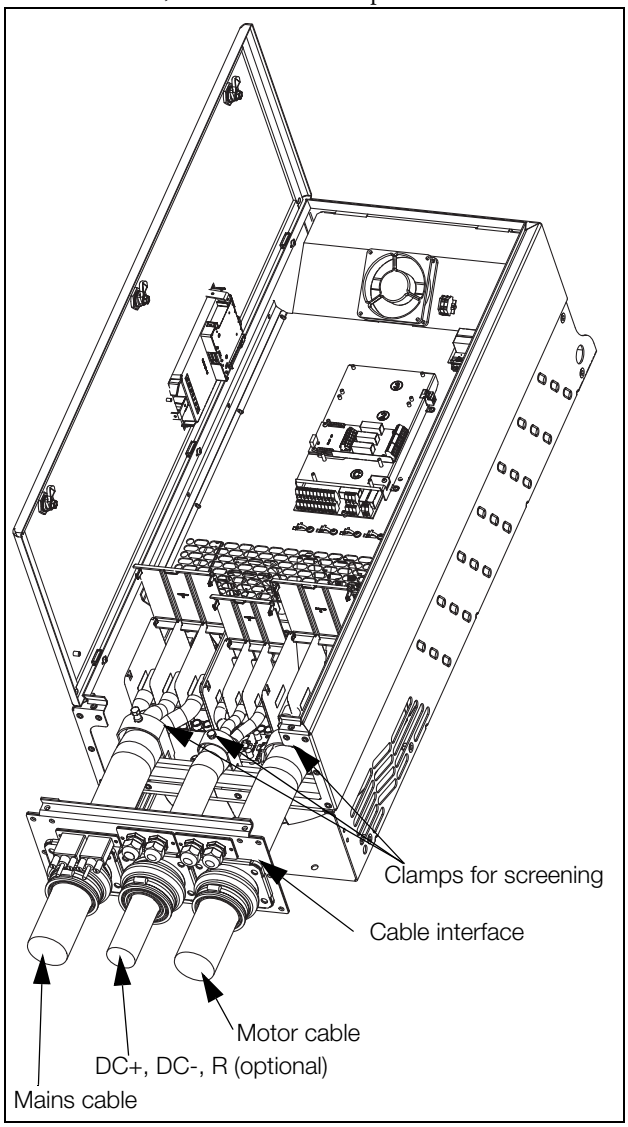

Fig. 44 Connecting motor and mains cables.

1. Remove the cable interface plate from the AC drive housing.
2. Put the cables through the glands.
3. Strip the cable according to Table 15.
4. Connect the stripped cables to the respective mains/ motor terminal.
5. Fix the clamps on appropriate place and tighten the cable in the clamp with good electrical contact to the cable screen.
6. Put the cable interface plate in place and secure with the fixing screws.

Omron SX-V D4200

To simplify the connection of thick motor and mains cables to the AC drive, the cable interface plate can be removed.

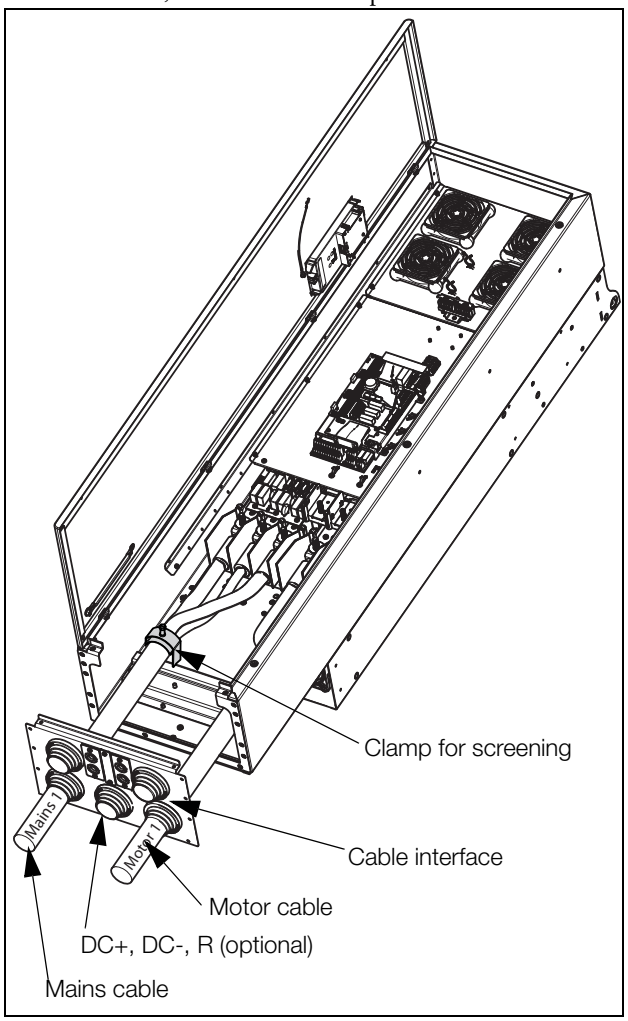

Fig. 45 Connection of lower mains and motor cables.

Start with the lower mains and motor cables (marked Mains 1 and Motor 1 in Fig. 46).

1. Remove the cable interface plate from the AC Drive housing.
2. Remove the upper mounting rail by loosen the four fastening screws.

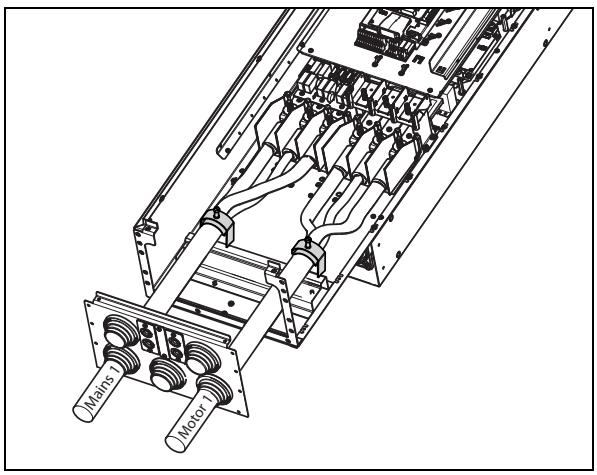

Fig. 46 Removed upper mounting rail.

3. Put the two lower cables (Mains 1 and Motor 1 cables) through the lower glands in the cable interface plate.
4. Strip the cables according to Table 17 and Fig. 55.
5. Connect the cable lugs to the stripped cable ends.
6. Connect the cable lugs to respective mains and motor terminal bolts.
7. Fix the clamps on appropriate place and tighten the cable in the clamp with good electrical contact to the cable screen.

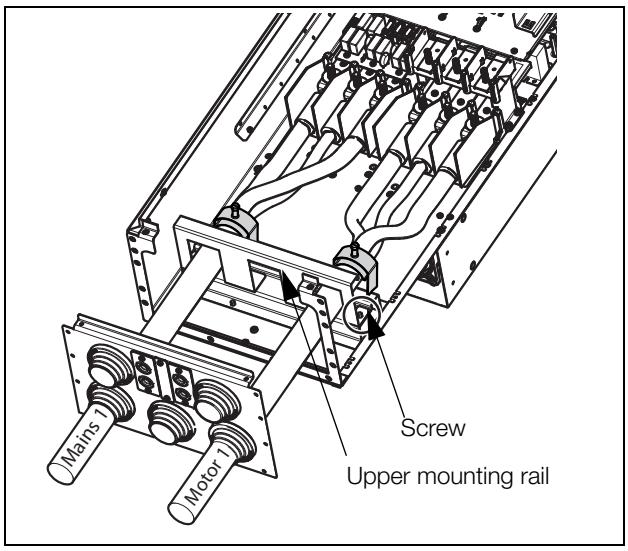

Fig. 47 Upper mounting rail mounted over the lower cables.

Continue with the upper mains and motor cables (marked Mains 2 and Motor 2 in Fig. 48).

1. Mount the upper mounting rail over the lower, connected cables (Mains 1 and Motor 1 cables) at same place as before, with the four screws.
2. Put the two upper cables (Mains 2 and Motor 2) through the glands in the cable interface plate.
3. Strip the cables according to Table 17 and Fig. 55.
4. Connect the cable lugs to the stripped cable ends.
5. Connect the cable lugs to respective mains/motor terminal bolts.
6. Fix the clamps on appropriate place and tighten the cable in the clamp with good electrical contact to the cable screen.
7. Put the cable interface plate in place and secure with the fixing screws.

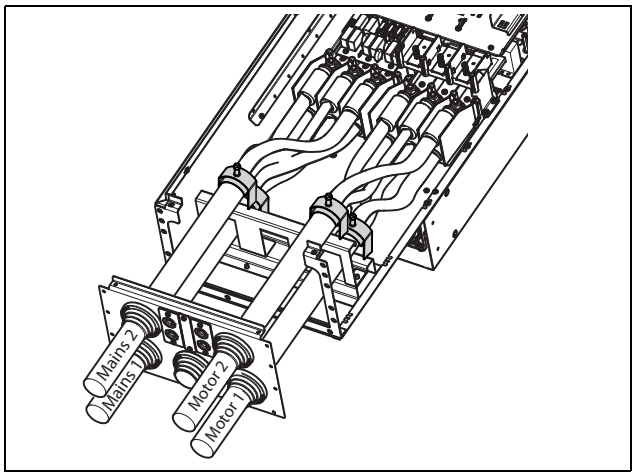

Fig. 48 All cables and cable clamps connected.

Omron SX-V D4045 mount extra ferrite core

Mount the ferrite core and its isolation sheet (included in the delivery) on the three motor phases U,V &W.
The protective earth (PE) and the screen of the cable should be mounted outside the core see Fig. 49.

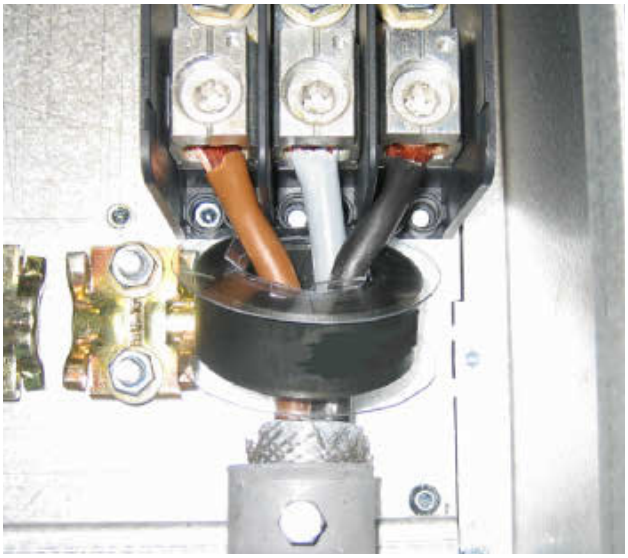

Fig. 49 Ferrite core mounted on the motor cables

The ferrite core is mounted on the motor cable to reduce disturbances and to fulfil the EMC standards. Since the core becomes very hot, the cables must be protected by a thermal isolation sheet that is attached on the core. The longer motor cables the hotter the core becomes.

NOTE: If the core is not mounted or mounted incorrect, the AC drive does not fulfil the EMC standards. If the protective isolation sheet is not mounted, the motor cable can be damaged from the hot core.

AC drive model D4220 and D6250

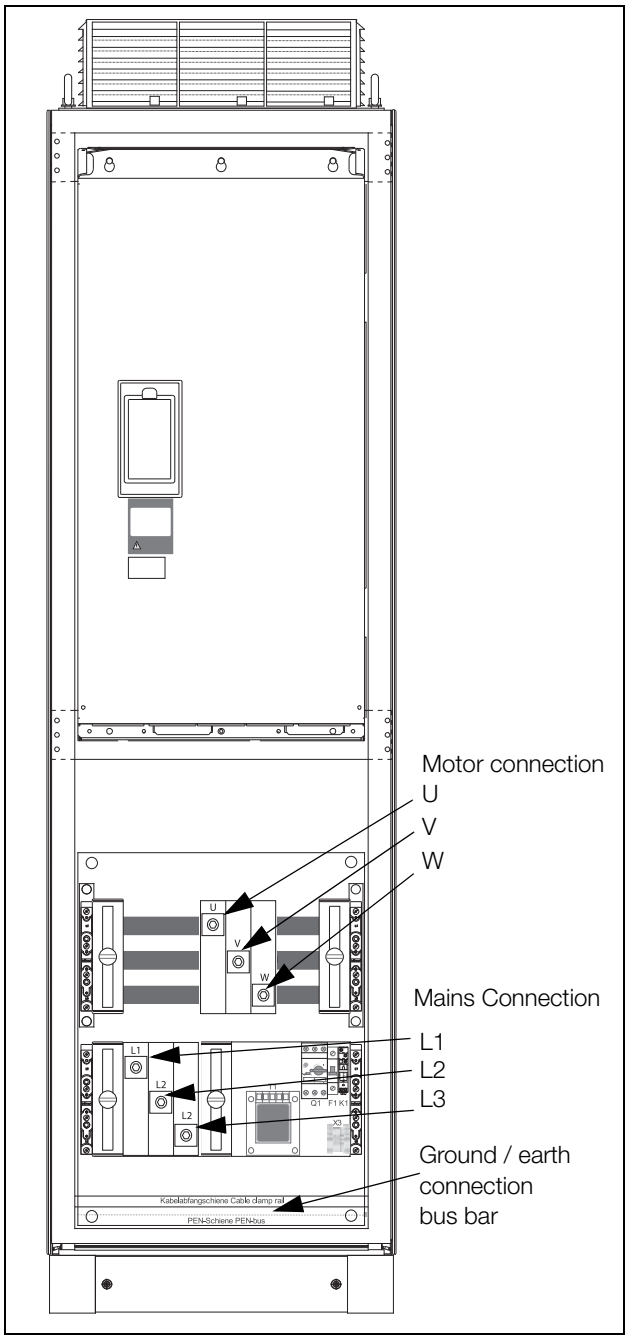

Fig. 50 Connect motor cables and mains cables to the terminals and earth/ground to the bus bar.

AC drive models D4220 and D6250 are supplied with power clamps for mains and motors. For connection of PE and earth there is a grounding bus bar.

For all type of wires to be connected the stripping length should be 32 mm (1.26 in).

3.3.1 Connection of mains and motor cables on IP20 modules

The Omron IP 20 modules are delivered complete with factory mounted cables for mains and motor. The length of the cables are app. 1100 mm (43 in). The cables are marked L1, L2, L3 for mains connection and U, V, W for motor connection.

NOTE: The IP20 modules are connected to PE/ Ground via the mounting screws. Make sure that these will have good contact to the grounded mounting plate/ cabinet wall.

For detailed information about use of the IP20 modules, please contact Omron.

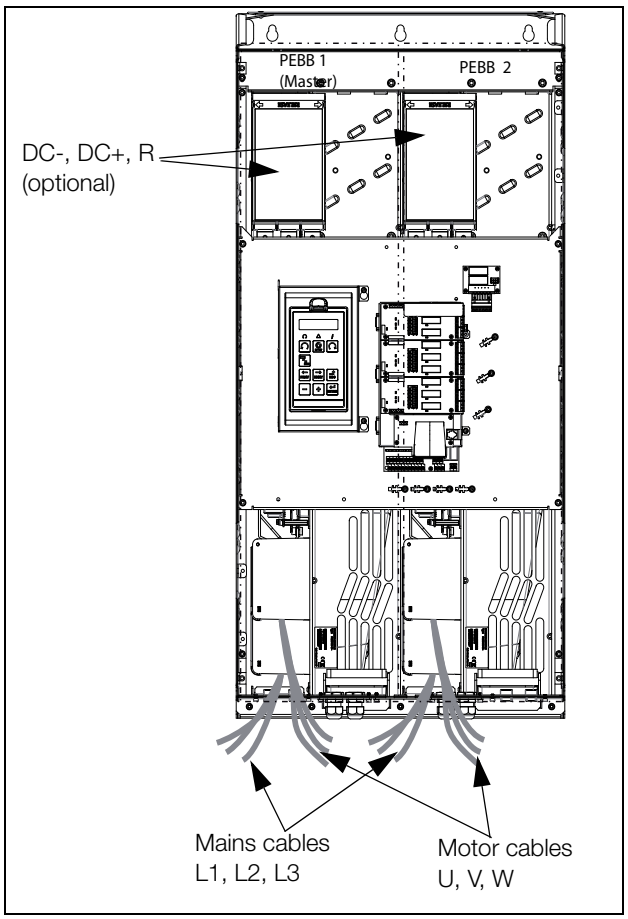

Fig. 51 IP20 module size H, with qty 2 x 3 mains cables and qty 2 x 3 motor cables.

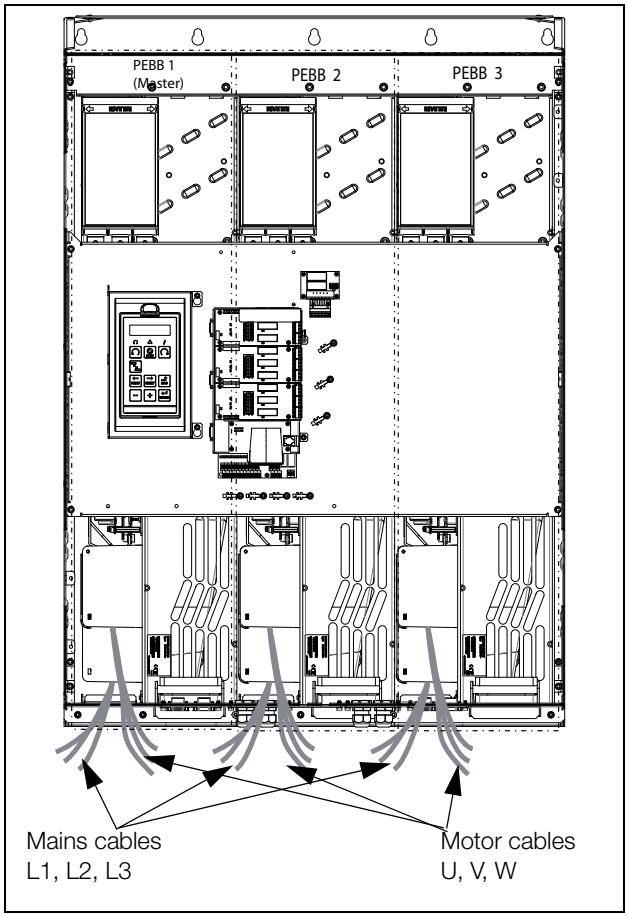

Fig. 52 IP20 module sizes I/I69 with qty 3 x 3 Mains cables and qty 3 x 3 motor cables.

3.4 Cable specifications

Table 14 Cable specifications

Cable	Cable specification
Mains	Power cable suitable for fixed installation for the voltage used.
Motor	Symmetrical three conductor cable with concentric protection (PE) wire or a four conductor cable with compact low-impedance concentric shield for the voltage used.
Control	Control cable with low-impedance shield, screened.

3.4.1 Stripping lengths

Fig. 53 indicates the recommended stripping lengths for motor and mains cables.

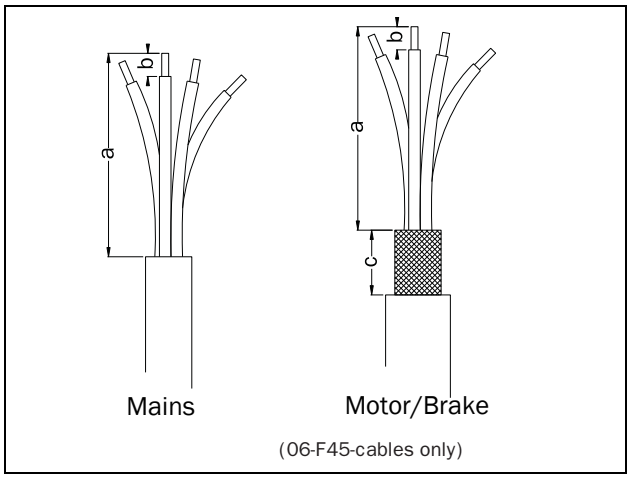

Fig. 53 Stripping lengths for cables

Table 15 Stripping lengths for mains, motor, brake and earth cables for frame sizes B to F

Model SX-V	Frame size	Mains cable		Motor cable			Brake cable			Earth cable	
		a mm (in)	b mm (in)	a mm (in)	b mm (in)	c mm (in)	a mm (in)	b mm (in)	c mm (in)	a mm (in)	b mm (in)
D40P7 - D47P5	B	90 (3.5)	10 (0.4)	90 (3.5)	10 (0.4)	20 (0.8)	90 (3.5)	10 (0.4)	20 (0.8)	90 (3.5)	10 (0.4)
D4011 - D4022	C	150 (5.9)	14 (0.2)	150 (5.9)	14 (0.2)	20 (0.8)	150 (5.9)	14 (0.2)	20 (0.8)	150 (5.9)	14 (0.2)
D61P5 - D6022	C69										
A61P5 - A6022	C2(69)	65 (2.7)	18 (0.7)	65 (2.7)	18 (0.7)	36 (1.4)	65 (2.7)	18 (0.7)	36 (1.4)	65 (2.7)	M6 screw*
A4011 - A4030	C2										
D4030 - D4037	D	110 (4.3)	17 (0.7)	110 (4.3)	17 (0.7)	34 (1.4)	110 (4.3)	17 (0.7)	34 (1.4)	110 (4.3)	17 (0.7)
D6030 - D6055	D69										
A6030 - A6055	D2(69)	92 (3.6)	18 (0.7)	92 (3.6)	18 (0.7)	36 (1.4)	92 (3.6)	18 (0.7)	36 (1.4)	92 (3.6)	M6 screw*
A403772 – A4055	D2										
A4045 - A4090	E	173 (6.8)	25 (1)	173 (6.8)	25 (1)	41 (1.6)	173 (6.8)	25 (1)	41 (1.6)	173 (6.8)	25 (1) 40 (1.6)**
A4075 - A4090	E2										
A4132 - A4160	F2	178 (7)	32 (1.3)	178 (7)	32 (1.3)	46 (1.8)	178 (7)		46 (1.8)	178 (7)	32 (1.3) 40 (1.6)**
D4110 - D4160	F										
D6075 - D6200	F69										

* Cable lug.

** Valid when brake chopper electronics are built in

Fig. 54 indicates the distance from the cable clamp to the connection bolts for decision of stripping lengths for the cables.

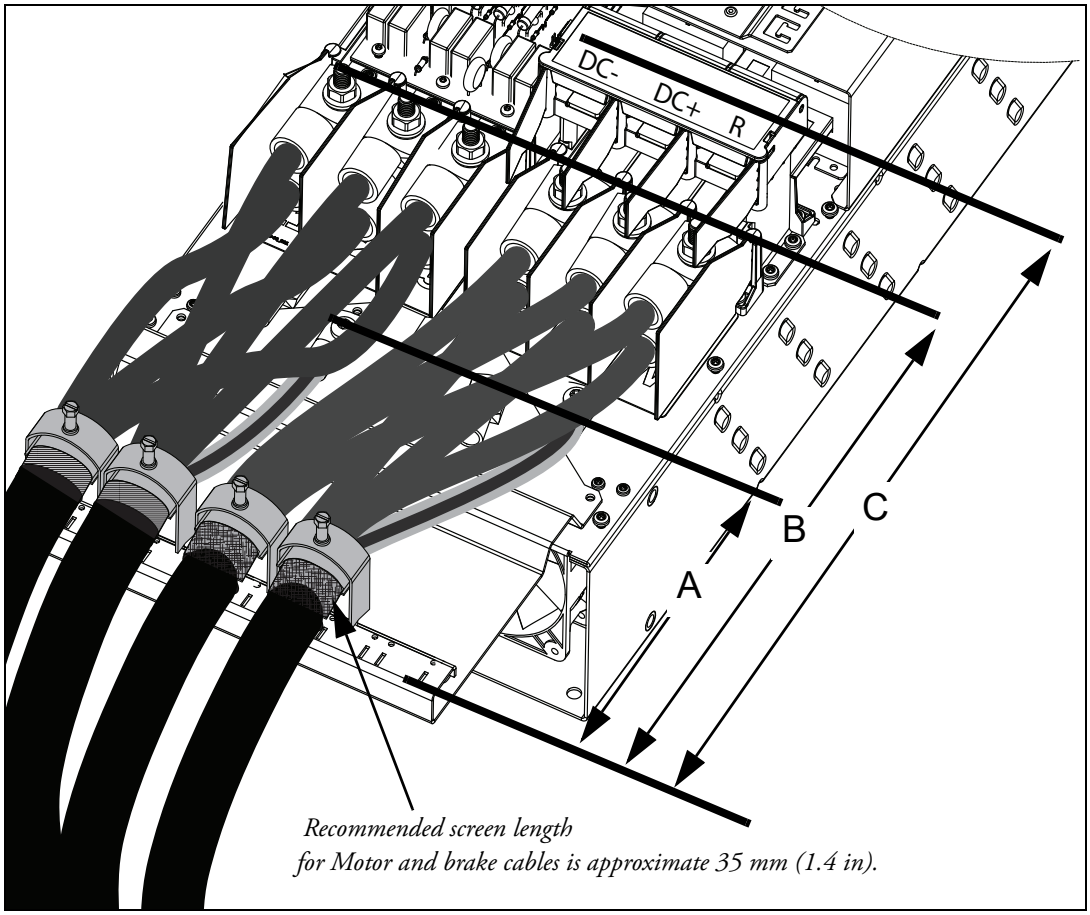

Fig. 54 Distances from the cable clamp to the connection bolts size FA2.

Table 16 Distances from the cable clamp to the connection bolts for mains, motor, brake and earth cables for frame size FA2.

Model SX-V	Frame size	Mains cable		Motor cable		Brake cable		Earth cable	
		B mm (in)	Bolt dimension	B mm (in)	Bolt dimension	C mm (in)	Bolt dimension	A mm (in)	Bolt dimension
A4200-E3	FA2	375 (14.8)	M10 bolt*	375 (14.8)	M10 bolt*	420 (16.5)	M8 bolt*	270 (10.6)	M8 bolt*

* Connect with cable lugs.

Fig. 55 indicates the distance from the cable clamp to the connection bolts for decision of stripping lengths for the cables.

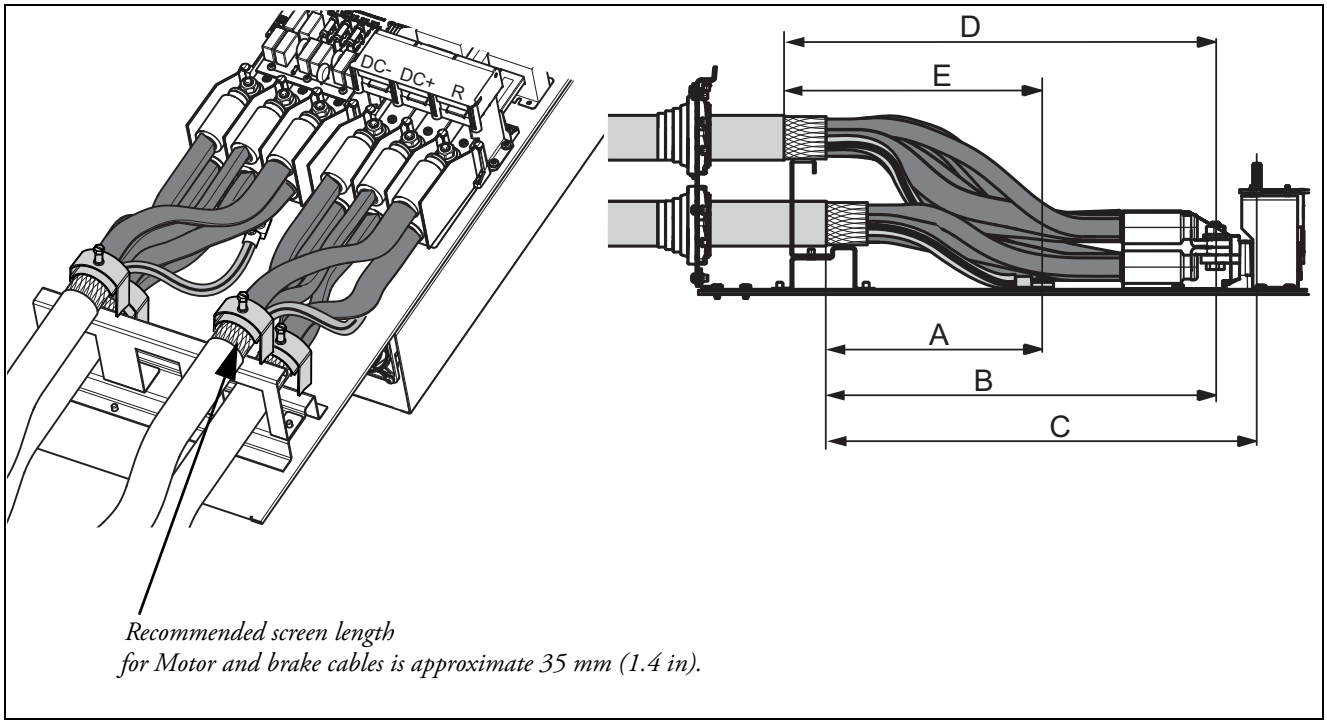

Fig. 55 Distances from the cable clamp to the connection bolts size FA.

Table 17 Distances from the cable clamp to the connection bolts for mains, motor, brake and earth cables for frame size FA.

Model SX-V	Frame size	Mains cable 1		Motor cable 1		Brake cable		Earth cable	
		B mm (in)	Bolt dimension	B mm (in)	Bolt dimension	C mm (in)	Bolt dimension	A mm (in)	Bolt dimension
D4200	FA	360 (14.2)	M10 bolt*	360 (14.2)	M10 bolt*	400 (15.7)	M8 bolt*	270 (10.6)	M8 bolt*

Model SX-V	Frame size	Mains cable 2		Motor cable 2		Earth cable	
		D mm (in)	Bolt dimension	D mm (in)	Bolt dimension	E mm (in)	Bolt dimension
D4200	FA	400 (15.7)	M10 bolt*	400 (15.7)	M10 bolt*	320 (12.6)	M8 bolt*

* Connect with cable lugs.

3.4.2 Fuse data

Please refer to the chapter Technical data, section 14.7, page 255.

3.4.3 Cable connection data for mains, motor and PE cables according to IEC ratings

NOTE: The dimensions of the power terminals used in the cabinet drive models 220 KW to 3K0 can differ depending on customer specification.

Table 18 Cable connector range and tightening torque for Omron SX-V_4, according to IEC ratings.

<table>
<tr><th rowspan="3">Model SX-V</th><th rowspan="3">Frame size</th><th colspan="6">Cable cross section connector range</th><th rowspan="3">Cable type</th></tr>
<tr><th colspan="2">Mains and motor</th><th colspan="2">Brake</th><th colspan="2">PE</th></tr>
<tr><th>Cable area mm^2</th><th>Tightening torque Nm</th><th>Cable area mm^2</th><th>Tightening torque Nm</th><th>Cable area mm^2</th><th>Tightening torque Nm</th></tr>
<tr><td>D40P7</td><td rowspan="7">B</td><td rowspan="7">0.5 - 10</td><td rowspan="7">1.2-1.4</td><td rowspan="7">0.5 - 10</td><td rowspan="7">1.2-1.4</td><td rowspan="7">1.5 - 16</td><td rowspan="7">2.6</td><td rowspan="20">Copper (Cu) / Aluminum (Al) 75°C</td></tr>
<tr><td>D41P5</td></tr>
<tr><td>D42P2</td></tr>
<tr><td>D43P0</td></tr>
<tr><td>D44P0</td></tr>
<tr><td>D45P5</td></tr>
<tr><td>D47P5</td></tr>
<tr><td>A4011</td><td rowspan="5">C2</td><td rowspan="5">4 - 25</td><td rowspan="5">2</td><td rowspan="5">4 - 25</td><td rowspan="5">2</td><td rowspan="5">4 - 25 *</td><td rowspan="5">4.3</td></tr>
<tr><td>A4015</td></tr>
<tr><td>A4018</td></tr>
<tr><td>A4022</td></tr>
<tr><td>A4030</td></tr>
<tr><td>D4011</td><td rowspan="4">C</td><td rowspan="4">2.5-16 stranded
2.5-25 solid</td><td rowspan="4">1.2-1.4</td><td rowspan="4">2.5-16 stranded
2.5-25 solid</td><td rowspan="4">1.2-1.4</td><td rowspan="4">6-16 stranded
6-25 solid</td><td rowspan="4">1.2-1.4</td></tr>
<tr><td>D4015</td></tr>
<tr><td>D4018</td></tr>
<tr><td>D4022</td></tr>
<tr><td>A4037</td><td rowspan="3">D2</td><td>0.75 -50</td><td>3.3</td><td>0.75 -50</td><td>3.3</td><td rowspan="3">10 - 70*</td><td rowspan="3">4.3</td></tr>
<tr><td>A4045</td><td rowspan="2">16 - 50</td><td rowspan="2">7.9</td><td rowspan="2">16 - 50</td><td rowspan="2">7.9</td></tr>
<tr><td>A4055</td></tr>
<tr><td>D4030</td><td rowspan="2">D</td><td rowspan="2">6-35 stranded
6-50 solid</td><td rowspan="2">2.8-3</td><td rowspan="2">6-35 stranded
6-50 solid</td><td rowspan="2">2.8-3</td><td rowspan="2">16-35 stranded
16-50 solid</td><td rowspan="2">2.8-3</td></tr>
<tr><td>D4037</td></tr>
<tr><td>A4075</td><td rowspan="2">E2</td><td rowspan="6">16- 150</td><td rowspan="6">31 (for 16-34 mm^2)

42 (for 35-150 mm^2)</td><td rowspan="6">16 - 120</td><td rowspan="6">31 (for 16-34 mm^2)

42 (for 35-120 mm^2)</td><td rowspan="6">16- 150

16 - 185 **</td><td rowspan="6">31 (for 16-34 mm^2)

42 (for 35-150 mm^2)

10 **</td></tr>
<tr><td>A4090</td></tr>
<tr><td>D4045</td><td rowspan="4">E</td></tr>
<tr><td>D4055</td></tr>
<tr><td>D4075</td></tr>
<tr><td>D4090</td></tr>
</table>

Table 18 Cable connector range and tightening torque for Omron SX-V_4, according to IEC ratings.

<table>
<tr><th rowspan="3">Model SX-V</th><th rowspan="3">Frame size</th><th colspan="6">Cable cross section connector range</th><th rowspan="3">Cable type</th></tr>
<tr><th colspan="2">Mains and motor</th><th colspan="2">Brake</th><th colspan="2">PE</th></tr>
<tr><th>Cable area mm^2</th><th>Tightening torque Nm</th><th>Cable area mm^2</th><th>Tightening torque Nm</th><th>Cable area mm^2</th><th>Tightening torque Nm</th></tr>
<tr><td>A4110</td><td rowspan="3">F2</td><td rowspan="6">25 - 240</td><td rowspan="6">31 (for 25-34 mm^2)
42 (for 35-152 mm^2)
56 (for 153-240 mm^2)</td><td rowspan="6">16 - 150</td><td rowspan="6">31 (for 16-34 mm^2)
42 (for 35-150 mm^2)</td><td rowspan="6">25 - 240
16 - 185 **</td><td rowspan="6">31 (for 25-34 mm^2)
42 (for 35-152 mm^2)
56 (for 153-240 mm^2)
10 **</td><td rowspan="6">Copper (Cu) / Aluminum (Al) 75°C</td></tr>
<tr><td>A4132</td></tr>
<tr><td>A4160</td></tr>
<tr><td>D4110</td><td rowspan="3">F</td></tr>
<tr><td>D4132</td></tr>
<tr><td>D4160</td></tr>
<tr><td>A4200-E3</td><td>FA2</td><td rowspan="2">M10 connection</td><td rowspan="2">47</td><td rowspan="2">M8 connection</td><td rowspan="2">24</td><td rowspan="2">M8 connection</td><td rowspan="2">24</td><td rowspan="2">Copper (Cu) / Aluminum (Al) 75°C</td></tr>
<tr><td>D4200</td><td>FA</td></tr>
<tr><td>A4220</td><td rowspan="2">H</td><td rowspan="2">(2x) 25 - 240</td><td rowspan="13">31 (for 25-34 mm^2)
42 (for 35-152 mm^2)
56 (for 153-240 mm^2)</td><td rowspan="2">(2x) 25 - 240</td><td rowspan="13">31 (for 25-34 mm^2)
42 (for 35-152 mm^2)
56 (for 153-240 mm^2)</td><td colspan="2" rowspan="13">PE/Earth via mounting screws/mounting frame. In order to secure proper earthing, always use all mounting screws and tighten them thoroughly.</td><td rowspan="13">Copper (Cu) / Aluminum (Al) 75°C</td></tr>
<tr><td>A4250</td></tr>
<tr><td>A4315</td><td rowspan="3">I</td><td rowspan="3">(3x) 25 - 240</td><td rowspan="3">(3x) 25 - 240</td></tr>
<tr><td>A4355</td></tr>
<tr><td>A4400</td></tr>
<tr><td>A4450</td><td rowspan="2">J</td><td rowspan="2">(4x) 25 - 240</td><td rowspan="2">(4x) 25 - 240</td></tr>
<tr><td>A4500</td></tr>
<tr><td>A4630</td><td rowspan="2">KA</td><td rowspan="2">(5x) 25 - 240</td><td rowspan="2">(5x) 25 - 240</td></tr>
<tr><td>A4710</td></tr>
<tr><td>A4800</td><td>K</td><td>(6x) 25 - 240</td><td>(6x) 25 - 240</td></tr>
<tr><td>A4900</td><td>L</td><td>(7x) 25 - 240</td><td>(7x) 25 - 240</td></tr>
<tr><td>A41K1</td><td>M</td><td>(8x) 25 - 240</td><td>(8x) 25 - 240</td></tr>
<tr><td>A41K2</td><td>N</td><td>(9x) 25 - 240</td><td>(9x) 25 - 240</td></tr>
<tr><td>A41K4</td><td>O</td><td>(10x) 25 - 240</td><td>(10x) 25 - 240</td></tr>
</table>

* With cable lug for M6 screw.

** Valid when brake chopper electronics are built in.

*** Use 90 °C Mains and motor cables if surrounding temperature is higher than 35 °C otherwise 75 °C cables.

**** IP 23 or IP 54 for cabinet drive.

Table 19 Cable connector range and tightening torque for Omron SX-V_6, according to IEC ratings

Model SX-V	Frame size	Cable cross section connector range						Cable type
		Mains and motor		Brake		PE		
		Cable area mm^2	Tightening torque Nm	Cable area mm^2	Tightening torque Nm	Cable area mm^2	Tightening torque Nm	
A/D61P5	C69/ C2(69)	2.5 - 16 stranded 2.5 - 25 solid	1.2 - 1.4	2.5 - 16 stranded 2.5 - 25 solid	1.2 - 1.4	6 - 16 stranded 6 - 25 solid	1.2 - 1.4	Copper (Cu)/ Aluminum (Al) 75°C
A/D62P2								
A/D63P0								
A/D64P0								
A/D65P5								
A/D67P5								
A/D6011								
A/D6015								
A/D6018								
A/D6022								
A/D6030	D69/ D2(69)	6 - 35 stranded 10 - 50 solid	2.8 - 3	6 - 35 stranded 10-50 solid	2.8 - 3	6 - 35 stranded 10 - 50 solid	2.8 - 3	
A/D6037								
A/D6045								
A/D6055								
D6075	F69	16 - 150	31 (for 16 - 34 mm^2) 42 (for 35-150 mm^2)	16 - 120	31 (for 16 - 34 mm^2) 42 (for 35-120 mm^2)	16 - 150 16 - 185 **	31 (for 16 - 34 mm^2) 42 (for 35-150 mm^2) 10 **	
D6090								
D6110								
D6132								
D6160								
D6200								

Table 19 Cable connector range and tightening torque for Omron SX-V_6, according to IEC ratings

A6250	H69	(2x) 25 - 240	31 (for 25-34 mm^2) 42 (for 35-152 mm^2) 56 (for 153-240 mm^2)	(2x) 25 - 240	31 (for 25-34 mm^2) 42 (for 35-152 mm^2) 56 (for 153-240 mm^2)	PE/Earth via mounting screws/mounting frame. In order to secure proper earthing, always use all mounting screws and tighten them thoroughly.	Copper (Cu)/ Aluminum (Al) 75°C
A6315							
A6355							
A6400							
A6450	I69	(3x) 25 - 240		(3x) 25 - 240			
A6500							
A6600							
A6630	J69	(4x) 25 - 240		(4x) 25 - 240			
A6710							
A6800							
A6900	KA69	(5x) 25 - 240		(5x) 25 - 240			
A61K0							
A61K2	K69	(6x) 25 - 240		(6x) 25 - 240			
A61K4	L69	(7x) 25 - 240		(7x) 25 - 240			
A61K6	M69	(8x) 25 - 240		(8x) 25 - 240			
A61K8	N69	(9x) 25 - 240		(9x) 25 - 240			
A62K0	O69	(10x) 25 - 240		(10x) 25 - 240			
A62K2	P69	(11x) 25 - 240		(11x) 25 - 240			
A62K4	Q69	(12x) 25 - 240		(12x) 25 - 240			
A62K6	R69	(13x) 25 - 240		(13x) 25 - 240			
A62K8	S69	(14x) 25 - 240		(14x) 25 - 240			
A63K0	T69	(15x) 25 - 240		(15x) 25 - 240			

** Valid when brake chopper electronics are built in.

3.4.4 Cable connection data for mains, motor and PE cables according to NEMA ratings

List of cable cross section connector range with minimum required AWG cable cross section which fits to the terminals according to UL-requirements.

Table 20 Cable connector range and tightening torque for Omron SX-V_4, according to NEMA ratings

Model SX-V	Frame size	Cable cross section connector range						Cable type
		Mains and motor		Brake		PE		
		Cable range AWG	Tightening torque Lb-In	Cable range AWG	Tightening torque Lb-In	Cable range AWG	Tightening torque Lb-In	
D40P7	B	20 - 8	11.5	20 - 8	11.5	16 - 6	23	Copper (Cu) 75°C
D41P5								
D42P2								
D43P0								
D44P0								
D45P5								
D47P5								
A4011	C2	12 - 4	18	12 - 4	18	12 - 4*	38	
A4015								
A4018								
A4022								
A4030								
D4011	C	18 - 4	10.6-12.3	18 - 4	10.6-12.3	18 - 4	10.6-12.3	
D4015								
D4018								
D4022								
A4037	D2	10 - 0	30 - 50	10 - 0	30 - 50	8 - 2/0*	38	
A4045		3 - 2/0	70	3 - 2/0	70			
A4055								
D4030	D	10 - 0	24.3-26.1	10 - 0	24.3-26.1	10 - 0	24.3-26.1	
D4037								
D4075	E2	6 - 300 kcmil	275 (for AWG 6 - 2) 375 (for AWG 1 - 300Kcmil)	6 - 250 kcmil	275 (for AWG 6 - 2) 375 (for AWG 1 - 250Kcmil)	6 - 300 kcmil 6 - 2/0**	275 (for AWG 6-2) 375 (for AWG 1-300Kcmil) 88**	
D4090								
D4045	E							
D4055								
D4075								
D4090								

Table 20 Cable connector range and tightening torque for Omron SX-V_4, according to NEMA ratings

Model SX-V	Frame size	Cable cross section connector range						Cable type
		Mains and motor		Brake		PE		
		Cable range AWG	Tightening torque Lb-In	Cable range AWG	Tightening torque Lb-In	Cable range AWG	Tightening torque Lb-In	
A4110	F2	4 - 500 kcmil	275 (for AWG 4 - 2) 375 (for AWG 1 -300 kcmil) 500 (for AWG 350 -500 kcmil)	6 - 300 kcmil	275 (for AWG 6 - 2) 375 (for AWG 1 - 300Kcmil)	4 - 500 kcmil 6 - 2/0**	275 (for AWG 4 - 2) 375 (for AWG 1 -300 kcmil) 500 (for AWG 350 -500 kcmil) 88**	Copper (Cu) 75°C
A4132								
A4160								
D4110	F							***
D4132-D4160								
A4200-E3	FA2	M10 connection	416	M8 connection	212	M8 connection	212	Copper (Cu) 75°C
D4200	FA							
A4220	H	(2x) 4 - 500 kcmil	275 (for AWG 4 - 2) 375 (for AWG 1 - 300 kcmil) 500 (for AWG 350 -500 kcmil)	(2x) 4 - 500 kcmil	275 (for AWG 4 - 2) 375 (for AWG 1 - 300 kcmil) 500 (for AWG 350 - 500 kcmil)	PE/Earth via mounting screws/mounting frame. In order to secure proper earthing, always use all mounting screws and tighten them thoroughly.		Copper (Cu) 75°C
A4250								
A4315	I	(3x) 4 - 500 kcmil		(3x) 4 - 500 kcmil				
A4355								
A4400								
A4450	J	(4x) 4 - 500 kcmil		(4x) 4 -500 kcmil				
A4500								
A4630	KA	(5x) 4 - 500 kcmil		(5x) 4 - 500 kcmil				
A4710								
A4800	K	(6x) 4 - 500 kcmil		(6x) 4 - 500 kcmil				
A4900	L	(7x) 4 - 500 kcmil		(7x) 4 - 500 kcmil				
A41K1	M	(8x) 4 - 500 kcmil		(8x) 4 - 500 kcmil				
A41K2	N	(9x) 4 - 500 kcmil		(9x) 4 - 500 kcmil				
A41K4	O	(10x) 4 - 500 kcmil		(10x)4-500 kcmil				

* With cable lug for M6 screw.

** Valid when brake chopper electronics are built in.

*** Use 90 °C Mains and motor cables if surrounding temperature is higher than 35 °C otherwise 75 °C cables.

3.5 Thermal protection on the motor

Standard motors are normally fitted with an internal fan. The cooling capacity of this built-in fan is dependent on the frequency of the motor. At low frequency, the cooling capacity will be insufficient for nominal loads. Please contact the motor supplier for the cooling characteristics of the motor at lower frequency.

WARNING!
Depending on the cooling characteristics of the motor, the application, the speed and the load, it may be necessary to use forced cooling on the motor.

Motor thermistors offer better thermal protection for the motor. Depending on the type of motor thermistor fitted, the optional PTC input may be used. The motor thermistor gives a thermal protection independent of the speed of the motor, thus of the speed of the motor fan. See the functions, Motor I^2t type [231] and Motor I^2t current [232].

3.6 Motors in parallel

It is possible to have motors in parallel as long as the total current does not exceed the nominal value of the AC drive. The following has to be taken into account when setting the motor data:

Menu [221] Motor Voltage:	The motors in parallel must have the same motor voltage.
Menu [222] Motor Frequency:	The motors in parallel must have the same motor frequency.
Menu [223] Motor Power:	Add the motor power values for the motors in parallel.
Menu [224] Motor Current:	Add the current for the motors in parallel.
Menu [225] Motor Speed:	Set the average speed for the motors in parallel.
Menu [227] Motor Cos PHI:	Set the average Cos PHI value for the motors in parallel.

4. Control Connections

4.1 Control board

Fig. 56 shows the layout of the control board which is where the parts most important to the user are located. Although the control board is galvanically isolated from the mains, for safety reasons do not make changes while the mains supply is on!

WARNING!
Always switch off the mains voltage and wait at least 7 minutes to allow the DC capacitors to discharge before connecting the control signals or changing position of any switches. If the option External supply is used, switch of the mains to the option. This is done to prevent damage on the control board.

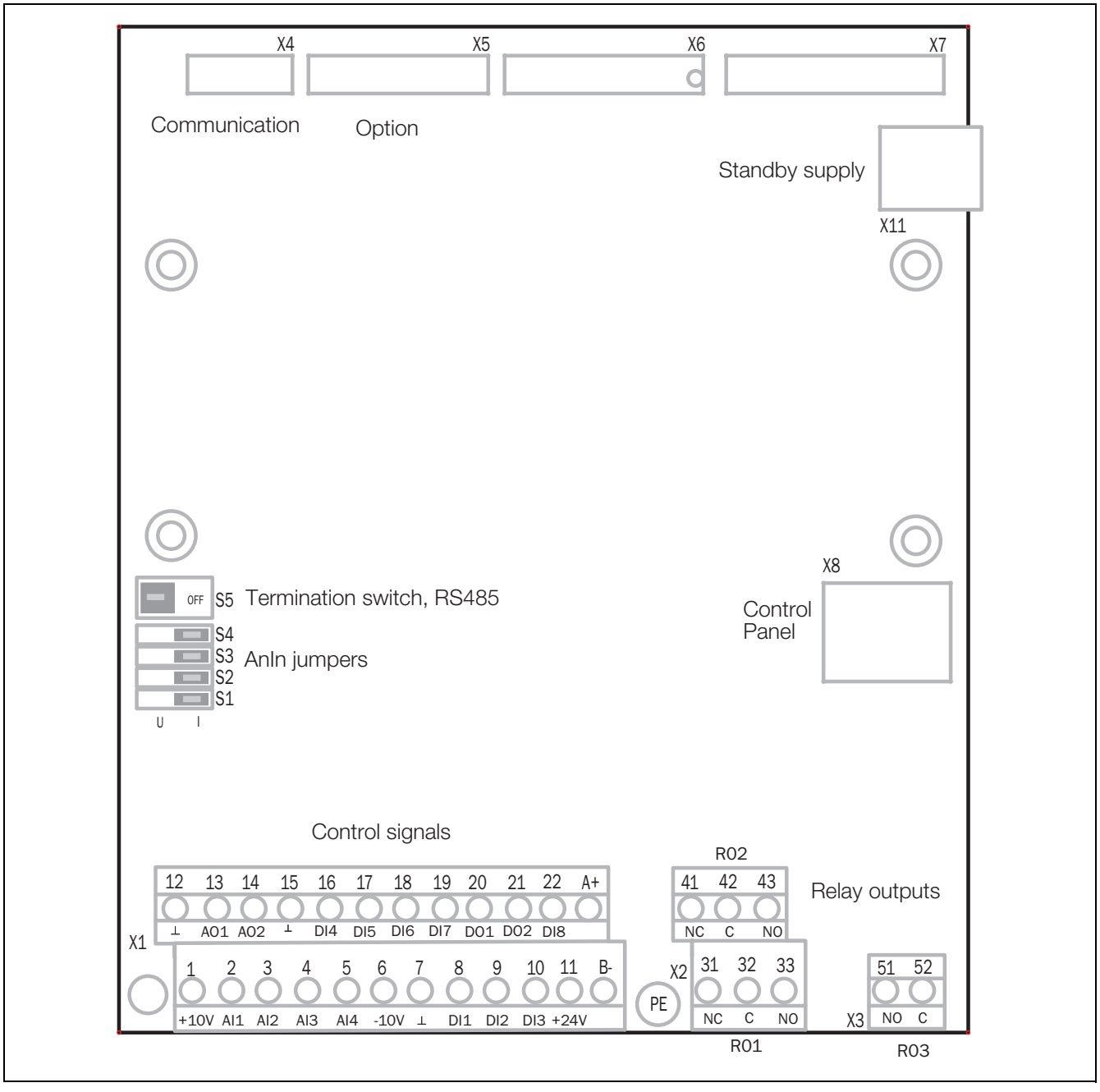

Fig. 56 Control board layout

4.2 Terminal connections

The terminal strip for connecting the control signals is accessible after opening the front panel.

The table describes the default functions for the signals. The inputs and outputs are programmable for other functions as described in chapter 11. page 99. For signal specifications refer to chapter 14. page 241.

NOTE: The maximum total combined current for outputs 11, 20 and 21 is 100mA.

NOTE: It is possible to use external 24V DC if connection to Common (15).

Table 21 Control signals

Terminal	Name	Function (Default)
Outputs		
1	+10 V	+10 VDC supply voltage
6	-10 V	-10 VDC supply voltage
7	Common	Signal ground
11	+24 V	+24 VDC supply voltage
12	Common	Signal ground
15	Common	Dig signal ground[1]
Digital inputs		
8	DigIn 1	RunL (reverse)
9	DigIn 2	RunR (forward)
10	DigIn 3	Off
16	DigIn 4	Off
17	DigIn 5	Off
18	DigIn 6	Off
19	DigIn 7	Off
22	DigIn 8	RESET
Digital outputs		
20	DigOut 1	Ready
21	DigOut 2	No trip
Analogue inputs		
2	AnIn 1	Process Ref
3	AnIn 2	Off
4	AnIn 3	Off
5	AnIn 4	Off
Analogue outputs		
13	AnOut 1	Min speed to max speed
14	AnOut 2	0 to max torque

Table 21 Control signals

Terminal	Name	Function (Default)
Integrated RS-485[2]		
A+	A+	RS-485 Differential transmit and receive
B–	B–	
Relay outputs		
31	N/C 1	Relay 1 output Trip, active when the AC drive is in a TRIP condition.
32	COM 1	
33	N/O 1	
41	N/C 2	Relay 2 output Run, active when the AC drive is started.
42	COM 2	
43	N/O 2	
51	COM 3	Relay 3 output Off
52	N/O 3	

1) Digital signal ground connected to 0 V via ferrite (600 Ohm @ 100 MHz).

2) The integrated RS-485 interface is a isolated interface supporting Modbus RTU protocol with baudrates ranging from 2400 bit/s up to 115.2 kbit/s. Termination and fail-safe can be activated via switch S5 when applicable. Note that proper termination and fail-safe is critical for a stable RS-485 network. It is recommended to use screened RS-485 cable which protects the signals from EMI. The cable screen should (in normal cases) be connected to inverter PE via provided screen clamps, see Fig. 57.

NOTE: N/C is opened when the relay is active and N/O is closed when the relay is active.

NOTE! Using potentiometer for reference signal to Analogue input: Possible potentiometer value in range of 1 kΩ to 10 kΩ (¼ Watt) linear, where we advice to use a linear 1 kΩ / ¼ W type potentiometer for best control linearity.

WARNING!
The relay terminals 31-52 are single isolated. Do NOT mix SELV voltage with e.g. 230 VAC on these terminals. A solution when dealing with mixed SELV/system voltage signals is to install an additional I/O board option (see chapter 13.8 page 237) and connect all SELV voltage signals to the relay terminals of this option board while connecting all 230VAC signals to the control board relay terminals 31 - 52.

4.2.1 Stand by supply interface (SBS)

The control board mounted standby supply, X11 connector, provides the possibility of keeping the communication system up and running without having the 3-phase mains connected. Another advantage is that the system can be set up without mains power. The option will also give backup for communication failure if main power is lost.

The standby supply should be supplied with a 24 VDC ±10% double isolated transformer capable of supplying 1A continues current. Recommended fuse is 2A. Cable length limited to 30 m. If the cable is longer than 30 m, a shielded cable must be used.

Table 22 X11 terminal

Terminal	Name	Function (Default)
1	+	24 VDC ±10%
2	–	0 V

NOTE: In case the isolated DC measurement board (that incorporate stand by supply [SBS] functionality) the control-board SBS should not be used. Rather the SBS on the isolated DC measurement board should be used. Failure to comply with this will break DC-link voltage measurement.

4.3 Configuration with jumpers and switches

4.3.1 Analogue input configuration (S1 - S4)

The jumpers selections S1 to S4 are used to set the input configuration for the 4 analogue inputs AnIn1, AnIn2, AnIn3 and AnIn4 as described in table 23. See Fig. 56 for the location of the jumpers.

Table 23 Switch settings

Input	Signal type	Selector configuration
AnIn1	Voltage	S1
	Current (default)	S1
AnIn2	Voltage	S2
	Current (default)	S2
AnIn3	Voltage	S3
	Current (default)	S3
AnIn4	Voltage	S4
	Current (default)	S4

NOTE: Scaling and offset of AnIn1 - AnIn4 can be configured using the software. See menus [512], [515], [518] and [51B] in section 11.7, page 178.

NOTE: the 2 analogue outputs AnOut 1 and AnOut 2 can be configured using the software. See menu [530] section 11.7.3, page 186

4.3.2 RS-485 termination (S5)

Switch S5 is used to activate termination and fail-safe resistors for the integrated RS-485-interface on terminal X1: A+ and B-. See Fig. 56 for the location of the switch.

Table 24 Settings switch S5

Input	Signal type	Selector configuration
RS-485	Off	S5
	Activated	S5

NOTE: It is important to have termination and fail-safe activated on at least one node on the network to secure proper function. The termination shall ONLY be enabled in the cable ends of a RS-485 network. The termination resistor is used to avoid reflections of transmitted signals and the fail-safe resistors will keep A+ and B- terminals at a steady state when no node is transmitting. It is important not to enable any additional termination apart from the two in each cable end as it will impose as an additional load for a transmitting transceiver and may cause malfunctioning.

4.4 Connection example

Fig. 57 gives an overall view of a AC drive connection example.

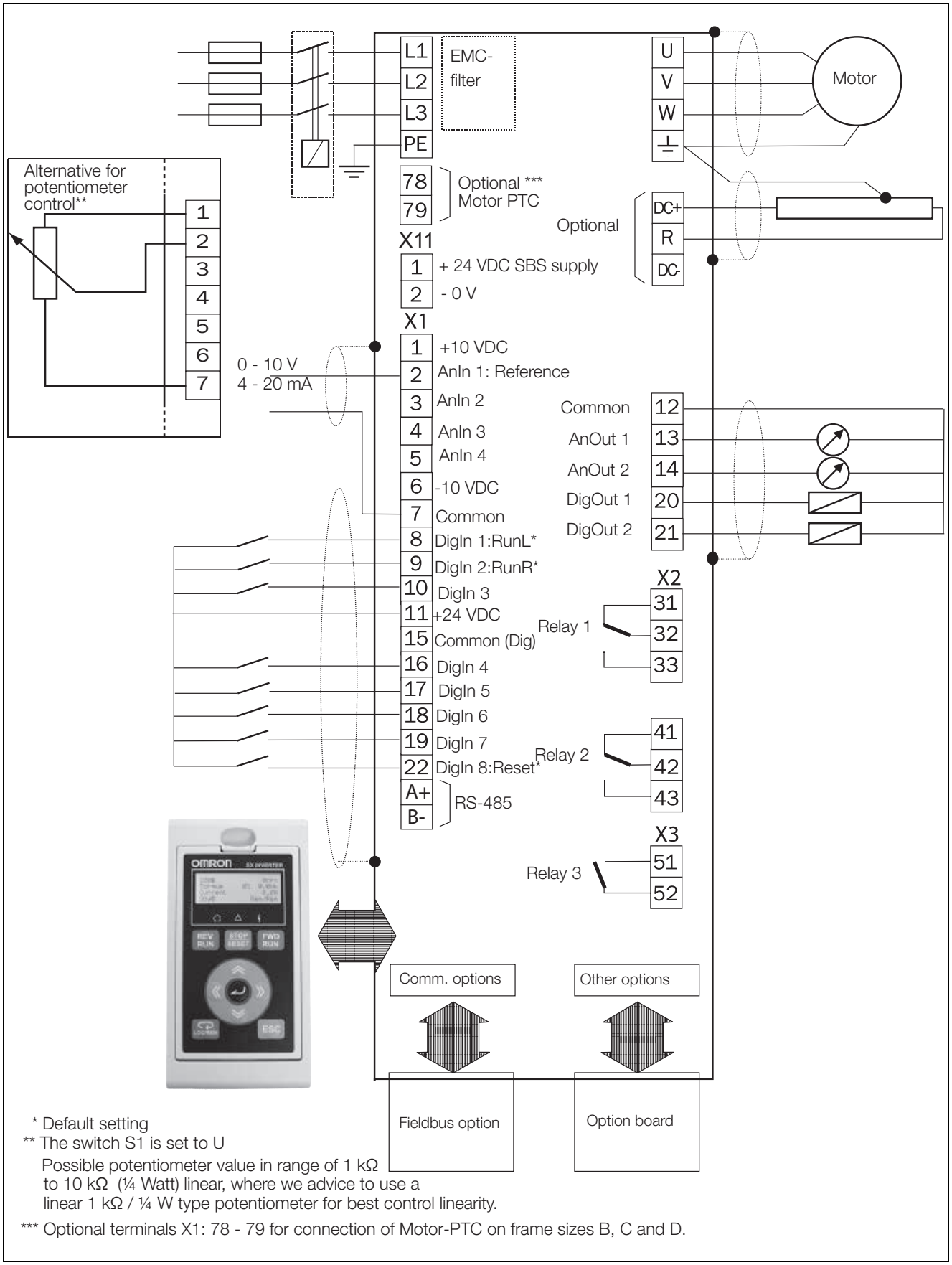

Fig. 57 Connection example

4.5 Connecting the Control Signals

4.5.1 Cables

The standard control signal connections are suitable for stranded flexible wire up to 1.5 mm^2 (AWG16) and for solid wire up to 2.5 mm^2(AWG14) .

NOTE: The screening of control signal cables must comply with the immunity levels given in the EMC Directive (reduction of noise level).

NOTE: The control cables must be separated from motor and mains cables.

Table 25 Description of optional terminals in Fig. 58 to Fig. 62.

Terminals 78, 79	For connection of Motor PTC
Terminals A-, B+	For connection of 24V Stand-by Supply (Valid for sizes D/D2/C69/ C2(69)/D69/D2(69)/FA/FA2)

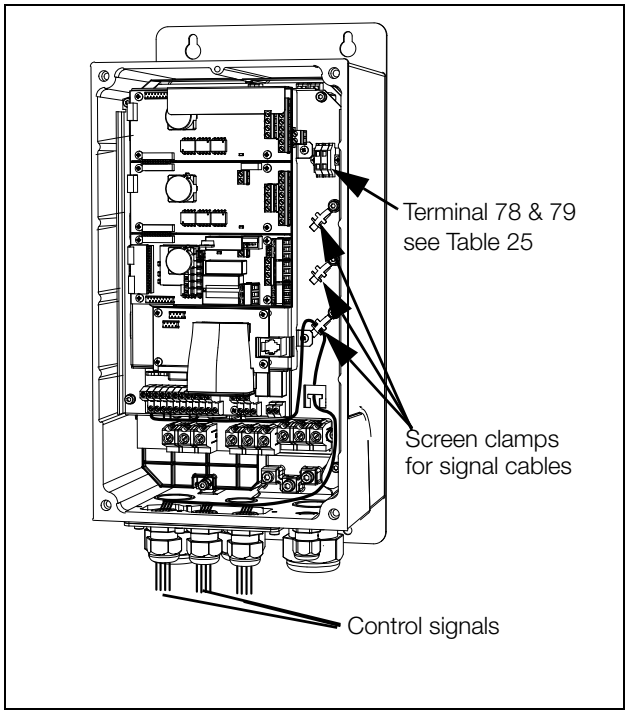

Fig. 58 Connecting the control signals, SX-V model SX-D40P7 to SX-D47P5, frame size B.

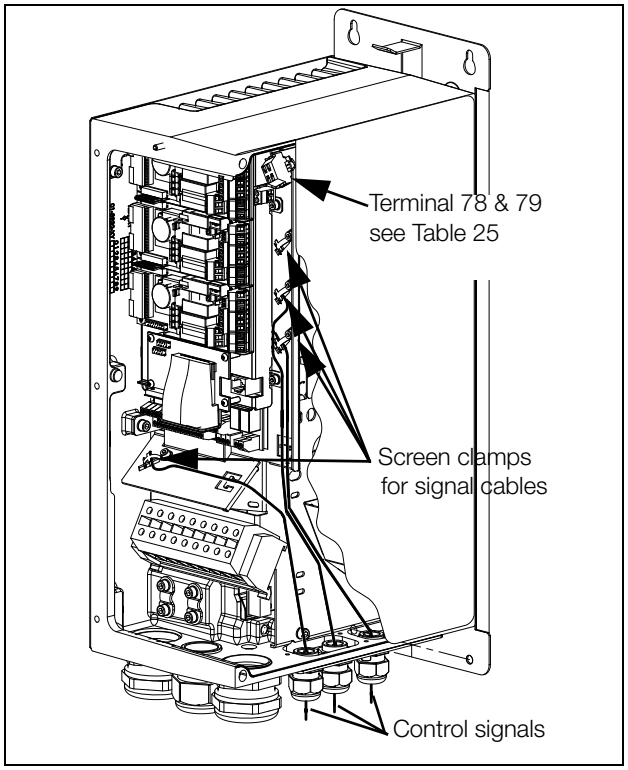

Fig. 59 Connecting the control signals, SX-V model SX-D4011 to SX-D4022, frame size C.

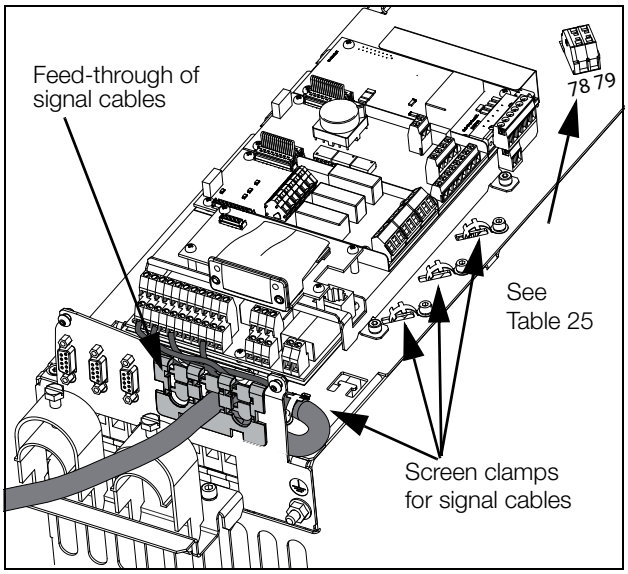

Fig. 60 Connecting the control signals, SX-V model SX-A4011 to A4030 frame size C2 and model SX-A61P5 to A6022 frame size C2(69).

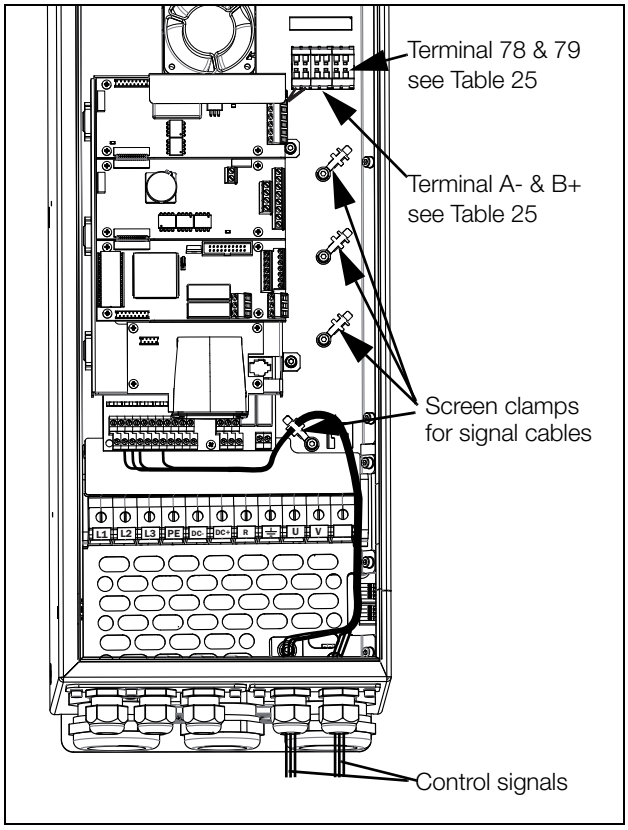

Fig. 61 Connecting the control signals, SX-V model SX-D4030 to D4037, frame size D and model SX-D6030 to D6055 frame size D(69).

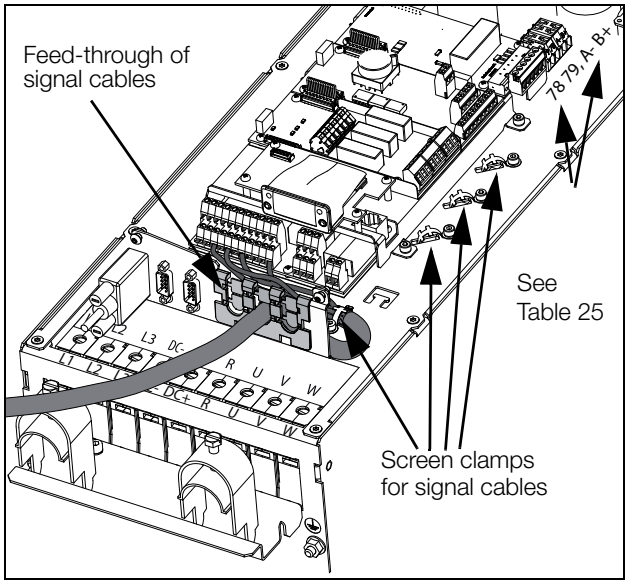

Fig. 62 Connecting the control signals, SX-V model SX-A403772 to A4055 frame size D2 and model SX-A6030 to A6055 frame size D2(69).

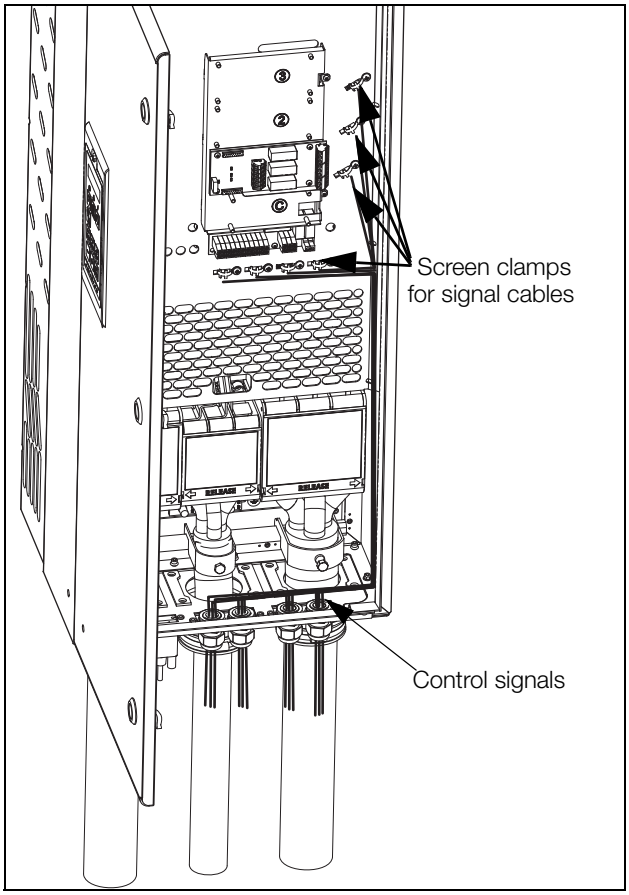

Fig. 63 Connecting the control signals, SX-V model SX-D4045 to D4160 and SX-V model SX-D6075 to D6200, frame size E, F and F69 (principle drawing).

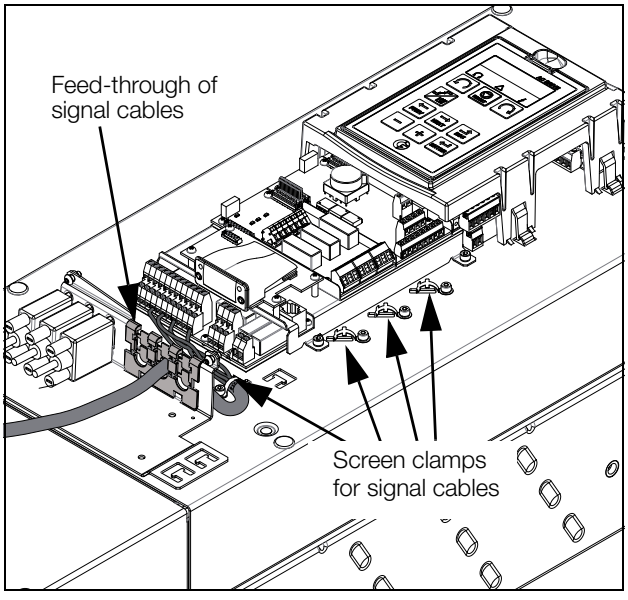

Fig. 64 Connecting the control signals, SX-V model SX-A4075 to A4200-E3 frame size E2, F2 and FA2 (principle drawing)

NOTE: The screening of control signal cables is necessary to comply with the immunity levels given in the EMC Directive (it reduces the noise level).

NOTE: Control cables must be separated from motor and mains cables.

4.5.2 Types of control signals

Always make a distinction between the different types of signals. Because the different types of signals can adversely affect each other, use a separate cable for each type. This is often more practical because, for example, the cable from a pressure sensor may be connected directly to the AC drive.

We can distinguish between the following types of control signals:

Analogue inputs

Voltage or current signals, (0-10 V, 0/4-20 mA) normally used as control signals for speed, torque and PID feedback signals.

Analogue outputs

Voltage or current signals, (0-10 V, 0/4-20 mA) which change slowly or only occasionally in value. In general, these are control or measurement signals.

Digital

Voltage or current signals (0-10 V, 0-24 V, 0/4-20 mA) which can have only two values (high or low) and only occasionally change in value.

Data

Usually voltage signals (0-5 V, 0-10 V) which change rapidly and at a high frequency, generally data signals such as RS-232, RS-485, Profibus, etc.

Relay

Relay contacts (0-250 VAC) can switch highly inductive loads (auxiliary relay, lamp, valve, brake, etc.).

Signal type	Maximum wire size	Tightening torque	Cable type
Analogue	Rigid cable: 0.14-2.5 mm^2 (AWG 26 - 14) Flexible cable: 0.14-1.5 mm^2 (AWG 26 - 16) Cable with ferrule: 0.25-1.5 mm^2 (AWG 24 - 16)	0.5 Nm (4.4 LB-in)	Screened
Digital			Screened
Data			Screened
Relay			Not screened

Example:

The relay output from a AC drive which controls an auxiliary relay can, at the moment of switching, form a source of interference (emission) for a measurement signal from, for example, a pressure sensor. Therefore it is advised to separate wiring and screening to reduce disturbances.

4.5.3 Screening

For all signal cables the best results are obtained if the screening is connected to both ends: the AC drive side and at the source (e.g. PLC, or computer). See Fig. 65.

It is strongly recommended that the signal cables be allowed to cross mains and motor cables at a 90° angle. Do not let the signal cable go in parallel with the mains and motor cable.

4.5.4 Single-ended or double-ended connection?

In principle, the same measures applied to motor cables must be applied to all control signal cables, in accordance with the EMC-Directives.

For all signal cables as mentioned in section 4.5.2 the best results are obtained if the screening is connected to both ends. See Fig. 65.

NOTE: Each installation must be examined carefully before applying the proper EMC measurements.

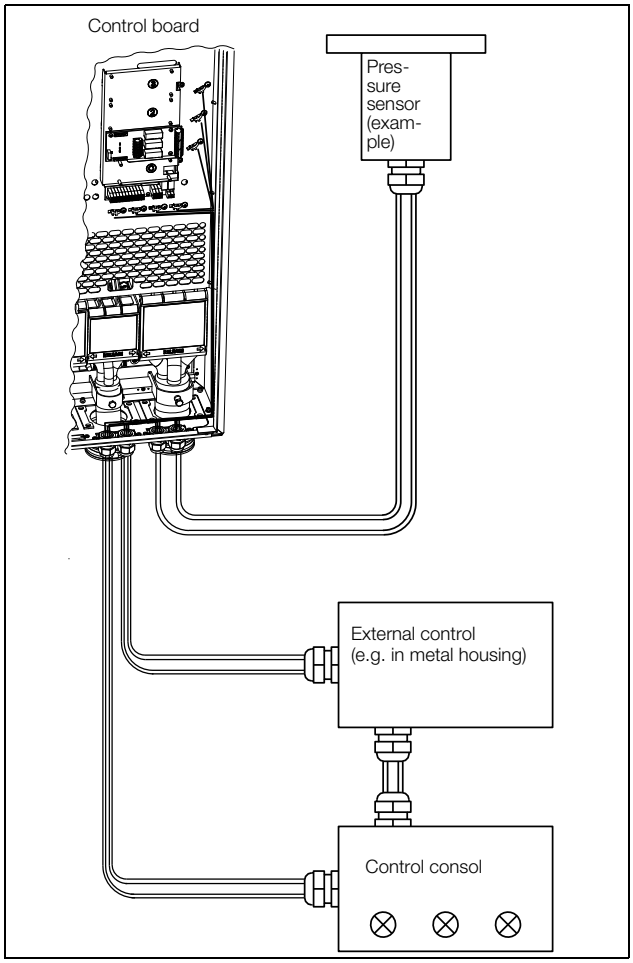

Fig. 65 Electro Magnetic (EM) screening of control signal cables.

4.5.5 Current signals ((0)4-20 mA)

A current signal like (0)4-20 mA is less sensitive to disturbances than a 0-10 V signal, because it is connected to an input which has a lower impedance (250 Ω) than a voltage signal (20 kΩ). It is therefore strongly advised to use current control signals if the cables are longer than a few metres.

4.5.6 Twisted cables

Analogue and digital signals are less sensitive to interference if the cables carrying them are “twisted”. This is certainly to be recommended if screening cannot be used. By twisting the wires the exposed areas are minimised. This means that in the current circuit for any possible High Frequency (HF) interference fields, no voltage can be induced. For a PLC it is therefore important that the return wire remains in proximity to the signal wire. It is important that the pair of wires is fully twisted over 360°.

4.6 Connecting options

The option cards are connected by the optional connectors X4 or X5 on the control board see Fig. 56, page 47 and mounted above the control board. The inputs and outputs of the option cards are connected in the same way as other control signals.

5. Getting Started

This chapter is a step by step guide that will show you the quickest way to get the motor shaft turning. We will show you two examples, remote control and local control.

We assume that the AC drive is mounted on a wall or in a cabinet as in the chapter 2. page 13.

First there is general information of how to connect mains, motor and control cables. The next section describes how to use the function keys on the control panel. The subsequent examples covering remote control and local control describe how to program/set the motor data and run the AC drive and motor.

5.1 Connect the mains and motor cables

Dimension the mains and motor cables according to local regulations. The cable must be able to carry the AC drive load current.

5.1.1 Mains cables

1. Connect the mains cables as in Fig. 66. The AC drive has, as standard, a built-in RFI mains filter that complies with category C3 which suits the Second Environment standard.

5.1.2 Motor cables

Connect the motor cables as in Fig. 66. To comply with the EMC directive you have to use screened cables and the motor cable screen has to be connected on both sides: to the housing of the motor and the housing of the AC drive.

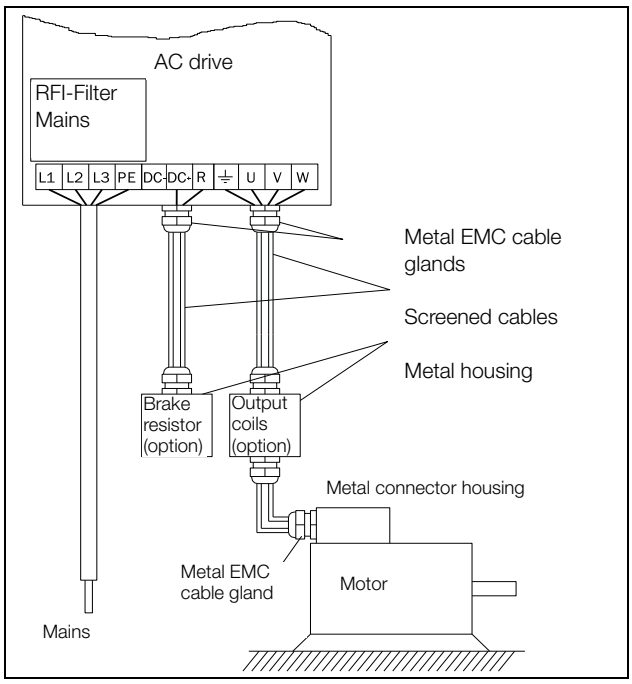

Fig. 66 Connection of mains and motor cables.

Table 26 Mains and motor connection

L1,L2,L3 PE	Mains supply, 3 -phase Safety earth
⏚ U, V, W	Motor earth Motor output, 3-phase

WARNING!
In order to work safely the mains earth must be connected to PE and the motor earth to ⏚.

5.2 Using the function keys

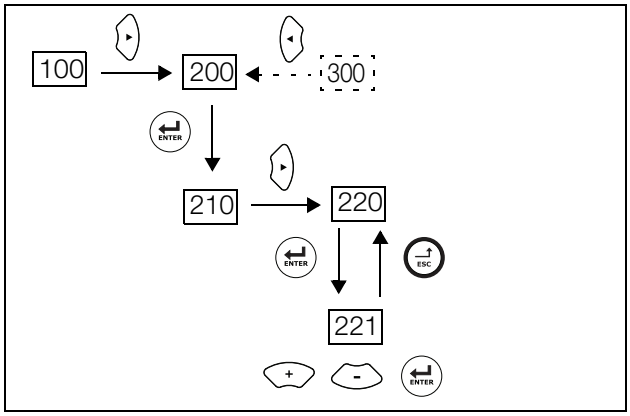

Fig. 67 Example of menu navigation when entering motor voltage

ENTER	step to lower menu level or confirm changed setting
ESC	step to higher menu level or ignore changed setting
	step to next menu on the same level
	step to previous menu on the same level
+	increase value or change selection
-	decrease value or change selection

5.3 Remote control

In this example external signals are used to control the AC drive/motor.

A standard 4-pole motor for 400 V, an external start button and a reference value will also be used.

5.3.1 Connect control cables

Here you will make up the minimum wiring for starting. In this example the motor/AC drive will run with right rotation.

To comply with the EMC standard, use screened control cables with plaited flexible wire up to 1.5 mm^2 (AWG15) or solid wire up to 2.5 mm^2(AWG13).

2. Connect a reference value between terminals 7 (Common) and 2 (AnIn 1) as in Fig. 68.
3. Connect an external start button between terminal 11 (+24 VDC) and 9 (DigIn2, RUNR) as in Fig. 68.

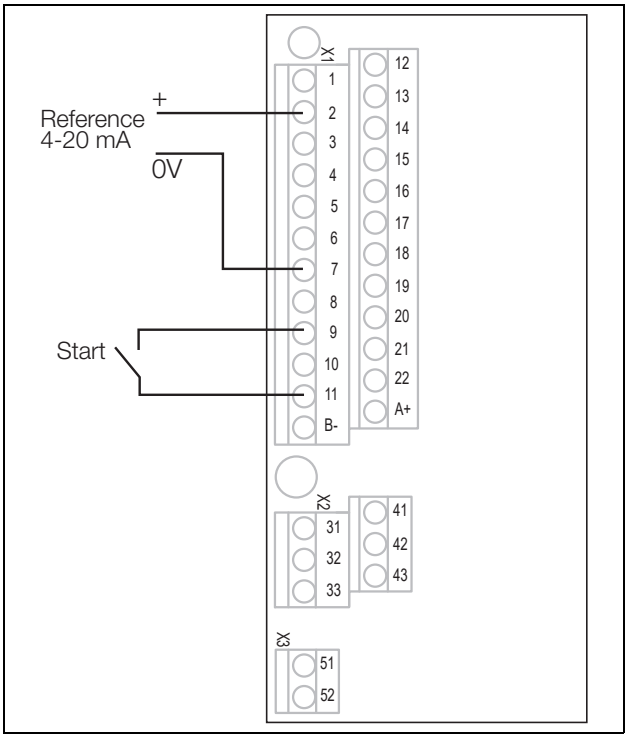

Fig. 68 Wiring

5.3.2 Switch on the mains

Once the mains is switched on, the internal fan in the AC drive will run for 5 seconds (In frame size A3 the fan runs continuously).

5.3.3 Set the Motor Data

Enter correct motor data for the connected motor. The motor data is used in the calculation of complete operational data in the AC drive.

Change settings using the keys on the control panel. For further information about the control panel and menu structure, see the chapter 10. page 87.

Menu [100], “Preferred View” is displayed when started.

1. Press to display menu [200], “Main Setup”.
2. Press and then to display menu [220], “Motor Data”.
3. Press to display menu [221] and set motor voltage.
4. Change the value using the and keys. Confirm with .
5. Set motor frequency [222].
6. Set motor power [223].
7. Set motor current [224].
8. Set motor speed [225].
9. Set power factor (cos φ) [227].
10. Select supply voltage level used [21B].
11. [229] Motor ID run: Choose Short, confirm with and give start command .

    The AC drive will now measure some motor parameters. The motor makes some beeping sounds but the shaft does not rotate. When the ID run is finished after about one minute ("Test Run OK!" is displayed), press to continue.
12. Use AnIn1 as input for the reference value. The default range is 4-20 mA. If you need a 0-10 V reference value, change switch (S1) on control board.
13. Switch off power supply.
14. Connect digital and analogue inputs/outputs as in Fig. 68.
15. Ready!
16. Switch on power supply.

5.3.4 Run the AC drive

Now the installation is finished, and you can press the external start button to start the motor.

When the motor is running the main connections are OK.

5.4 Local control

Manual control via the control panel can be used to carry out a test run.

Use a 400 V motor and the control panel.

5.4.1 Switch on the mains

Once the mains is switched on, the AC drive is started and the internal fan will run for 5 seconds (In frame size A3 the fan runs continuously).

5.4.2 Select manual control

Menu [100], “Preferred View” is displayed when started.

1. Press to display menu [200], “Main Setup”.
2. Press to display menu [210], “Operation”.
3. Press to display menu [211], “Language”.
4. Press to display menu [214], “Reference Control”.
5. Select **Keyboard** using the key and press to confirm.
6. Press to get to menu [215], “Run/Stop Control”.
7. Select **Keyboard** using the key and press to confirm.
8. Press to get to previous menu level and then to display menu [220], “Motor Data”.

5.4.3 Set the Motor Data

Enter correct motor data for the connected motor.

9. Press to display menu [221].
10. Change the value using the and keys. Confirm with .
11. Press to display menu [222].
12. Repeat step 9 and 10 until all motor data is entered.
13. Press twice and then to display menu [100], Preferred View.

5.4.4 Enter a Reference Value

Enter a reference value.

14. Press until menu [300], “Process” is displayed.
15. Press to display menu [310], “Set/View reference” value.
16. Use the and keys to enter, for example, 300 rpm. We select a low value to check the rotation direction without damaging the application.

5.4.5 Run the AC drive

Press the key on the control panel to run the motor forward.

If the motor is running the main connections are OK.

6. Applications

This chapter contains tables giving an overview of many different applications/duties in which it is suitable to use AC drives from Omron. Further on you will find application examples of the most common applications and solutions.

6.1 Application overview

6.1.1 Pumps

Challenge	Omron SX-V solution	Menu
Dry-running, cavitation and overheating damage the pump and cause downtime.	Pump Curve Protection detects deviation. Sends warning or activates safety stop.	411–419, 41C1– 41C9
Sludge sticks to impeller when pump has been running at low speed or been stationary for a while. Reduces the pump's efficiency.	Automatic pump rinsing function: pump is set to run at full speed at certain intervals, then return to normal speed.	362–368, 560, 640
Motor runs at same speed despite varying demands in pressure/flow. Energy is lost and equipment stressed.	PID continuously adapts pressure/flow to the level required. Sleep function activated when none is needed.	320, 380, 342, 354
Process inefficiency due to e.g. a blocked pipe, a valve not fully opened or a worn impeller.	Pump Curve Protection detects deviation. Warning is sent or safety stop activated.	411–419, 41C1–41C9
Water hammer damages the pump when stopped. Mechanical stress on pipes, valves, gaskets, seals.	Smooth linear stops protect the equipment. Eliminates need for costly motorized valves.	331–336

6.1.2 Fans

Challenge	Omron SX-V solution	Menu
Starting a fan rotating in the wrong direction can be critical, e.g. a tunnel fan in event of a fire.	Fan is started at low speed to ensure correct direction and proper function.	219, 341
Draft causes turned off fan to rotate the wrong way. Starting causes high current peaks and mechanical stress.	Motor is gradually slowed to complete stop before starting. Avoids blown fuses and breakdown.	219, 33A, 335
Regulating pressure/flow with dampers causes high energy consumption and equipment wear.	Automatic regulation of pressure/flow with motor speed gives more exact control.	321, 354
Motor runs at same speed despite varying demands in pressure/flow. Energy is lost and equipment stressed.	PID continuously adapts to the level required. Sleep function is activated when none is needed.	320, 380, 342, 354
Process inefficiency due to e.g. a blocked filter, a damper not fully opened or a worn belt.	Load Curve Protection detects deviation. Warning is sent or safety stop activated.	411–419, 41C1–41C9

6.1.3 Compressors

Challenge	Omron SX-V solution	Menu
Compressor is damaged when cooling media enters the compressor screw.	Overload situation is quickly detected and safety stop can be activated to avoid breakdown.	411–41A
Pressure is higher than needed, causing leaks, stress on the equipment and excessive air use.	Load Curve Protection function detects deviation. Warning is sent or safety stop activated.	411–419, 41C1–41C9
Motor runs at same speed when no air is compressed. Energy is lost and equipment stressed.	PID continuously adapts to the level required. Sleep function activated when none is needed.	320, 380, 342, 354
Process inefficiency and energy wasted due to e.g. the compressor idling.	Load Curve Protection quickly detects deviation. Warning is sent or safety stop activated.	411–419, 41C1–41C9

6.1.4 Blowers

Challenge	Omron SX-V solution	Menu
Difficult to compensate for pressure fluctuations. Wasted energy and risk of production stop.	PID function continuously adapts pressure to the level required.	320, 380
Motor runs at same speed despite varying demands. Energy is lost and equipment stressed.	PID continuously adapts air flow to level required. Sleep function activated when none is needed.	320, 380, 342, 354
Process inefficiency due to e.g. a broken damper, a valve not fully opened or a worn belt.	Load Curve Protection quickly detects deviation. Warning is sent or safety stop activated.	411–419, 41C1–41C9

7. Main Features

This chapter contains descriptions of the main features of the AC drive.

7.1 Parameter sets

Only valid if the option HCP - Handheld Control Panel is used.

Parameter sets are used if an application requires different settings for different modes. For example, a machine can be used for producing different products and thus requires two or more maximum speeds and acceleration/deceleration times. With the four parameter sets different control options can be configured with respect to quickly changing the behaviour of the AC drive. It is possible to adapt the AC drive online to altered machine behaviour. This is based on the fact that at any desired moment any one of the four parameter sets can be activated during Run or Stop, via the digital inputs or the control panel and menu [241].

Each parameter set can be selected externally via a digital input. Parameter sets can be changed during operation and stored in the control panel.

NOTE: The only data not included in the parameter set is Motor data 1-4, (entered separately), language, communication settings, selected set, local remote, and keyboard locked.

7.1.1 Define parameter sets

When using parameter sets you first decide how to select different parameter sets. The parameter sets can be selected via the control panel, via digital inputs or via serial communication. All digital inputs and virtual inputs can be configured to select parameter set. The function of the digital inputs is defined in the menu [520].

Fig. 69 shows the way the parameter sets are activated via any digital input configured to Set Ctrl 1 or Set Ctrl 2.

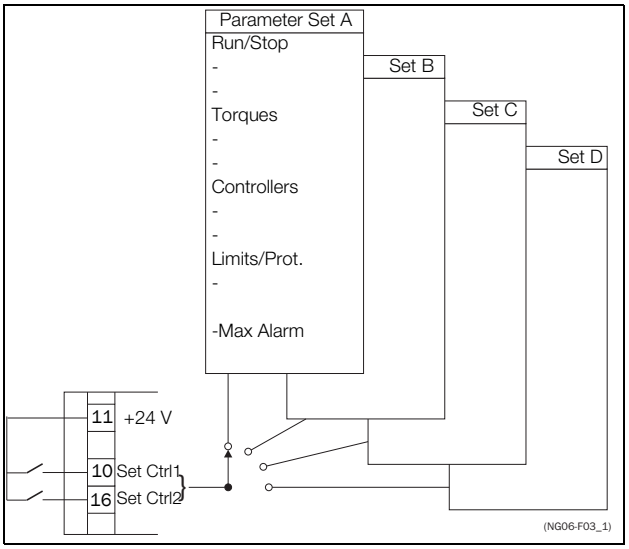

Fig. 69 Selecting the parameter sets

7.1.2 Select and copy parameter set

The parameter set selection is done in menu [241], “Select Set”. First select the main set in menu [241], normally A. Adjust all settings for the application. Usually most parameters are common and therefore it saves a lot of work by copying set A>B in menu [242]. When parameter set A is copied to set B you only change the parameters in the set that need to be changed. Repeat for C and D if used.

With menu [242], Copy Set, it is easy to copy the complete contents of a single parameter set to another parameter set. If, for example, the parameter sets are selected via digital inputs, DigIn 3 is set to Set Ctrl 1 in menu [523] and DigIn 4 is set to Set Ctrl 2 in menu [524], they are activated as in Table 27.

Activate the parameter changes via digital input by setting menu [241], “Select Set” to DigIn.

Table 27 Parameter set

Parameter set	Set Ctrl 1	Set Ctrl 2
A	0	0
B	1	0
C	0	1
D	1	1

NOTE: The selection via the digital inputs is immediately activated. The new parameter settings will be activated on-line, also during Run.

NOTE: The default parameter set is parameter set A.

Examples

Different parameter sets can be used to easily change the setup of a AC drive to adapt quickly to different application requirements. For example when

- a process needs optimized settings in different stages of the process, to
  - increase the process quality
  - increase control accuracy
  - lower maintenance costs
  - increase operator safety

With these settings a large number of options are available. Some ideas are given here:

Multi frequency selection

Within a single parameter set the 7 preset references can be selected via the digital inputs. In combination with the parameter sets, 28 preset references can be selected using all 5 digital inputs: DigIn1, 2 and 3 for selecting preset reference within one parameter set and DigIn 4 and DigIn 5 for selecting the parameter sets.

Bottling machine with 3 different products

Use 3 parameter sets for 3 different Jog reference speeds when the machine needs to be set up. The 4th parameter set can be used for "normal" remote control when the machine is running at full production.

Manual - automatic control

If in an application something is filled up manually and then the level is automatically controlled using PID regulation, this is solved using one parameter set for the manual control and one for the automatic control.

7.1.3 One motor and one parameter set

This is the most common application for pumps and fans.

Once default motor M1 and parameter set A have been selected:

1. Enter the settings for motor data.
2. Enter the settings for other parameters e.g. inputs and outputs

7.1.4 One motor and two parameter sets

This application is useful if you for example have a machine running at two different speeds for different products.

Once default motor M1 is selected:

1. Select parameter set A in menu [241].
2. Enter motor data in menu [220].
3. Enter the settings for other parameters e.g. inputs and outputs.
4. If there are only minor differences between the settings in the parameter sets, you can copy parameter set A to parameter set B, menu [242].
5. Enter the settings for parameters e.g. inputs and outputs.

Note: Do not change motor data in parameter set B.

7.1.5 Two motors and two parameter sets

This is useful if you have a machine with two motors that can not run at the same time, such as a cable winding machine that lifts up the reel with one motor and then turns the wheel with the other motor.

One motor must stop before changing to an other motor.

1. Select parameter set A in menu [241].
2. Select motor M1 in menu [212].
3. Enter motor data and settings for other parameters e.g. inputs and outputs.
4. Select parameter set B in menu [241].
5. Select M2 in menu [212].
6. Enter motor data and settings for other parameters e.g. inputs and outputs.

7.1.6 Autoreset at trip

For several non-critical application-related failure conditions, it is possible to automatically generate a reset command to overcome the fault condition. The selection can be made in menu [250]. In this menu the maximum number of automatically generated restarts allowed can be set, see menu [251], after this the AC drive will stay in fault condition because external assistance is required.

Example

The motor is protected by an internal protection for thermal overload. When this protection is activated, the AC drive should wait until the motor is cooled down enough before resuming normal operation. When this problem occurs three times in a short period of time, external assistance is required.

The following settings should be applied:

- Insert maximum number of restarts; set menu [251] to 3.
- Activate Motor I^2t to be automatically reset; set menu [25A] to 300 s.
- Set relay 1, menu [551] to "AutoRst Trip"; a signal will be available when the maximum number of restarts is reached and the AC drive stays in fault condition.
- The reset input must be constantly activated.

7.1.7 Reference priority

The active speed reference signal can be programmed from several sources and functions. The table below shows the priority of the different functions with regards to the speed reference.

Table 28 Reference priority

Main Priority	Ref. selection	Priority
1. Jog, (menu [520], [348])	-	
2. Reference selection, (menu [214])	Remote	1. Preset
		2. MotPot
		3. AnIn
	Keypad	-
	Com	-
	Option	-

7.1.8 Preset references

The AC drive is able to select fixed speeds via the control of digital inputs. This can be used for situations where the required motor speed needs to be adapted to fixed values, according to certain process conditions. Up to 7 preset references can be set for each parameter set, which can be selected via all digital inputs that are set to Preset Ctrl1, Preset Ctrl2 or Preset Ctrl3. The amount digital inputs used that are set to Preset Ctrl determines the number of Preset References available; using 1 input gives 1 speed, using 2 inputs gives 3 speeds and using 3 inputs gives 7 speeds.

Example

The use of four fixed speeds, at 50 / 100 / 300 / 800 rpm, requires the following settings:

- Set DigIn 5 as first selection input; set [525] to Preset Ctrl1.
- Set DigIn 6 as second selection input; set [526] to Preset Ctrl2.
- Set menu [341] "Min Speed" to 50 rpm.
- Set menu [362] "Preset Ref 1" to 100 rpm.
- Set menu [363] "Preset Ref 2" to 300 rpm.
- Set menu [364] "Preset Ref 3" to 800 rpm.

With these settings, the AC drive switched on and a RUN command given, the speed will be:

- 50 rpm, when both DigIn 5 and DigIn 6 are low.
- 100 rpm, when DigIn 5 is high and DigIn 6 is low.
- 300 rpm, when DigIn 5 is low and DigIn 6 is high.
- 800 rpm, when both DigIn 5 and DigIn 6 are high.

7.2 Remote control functions

Operation of the Run/Stop/Enable/Reset functions

As default, all the run/stop/reset related commands are programmed for remote operation via the inputs on the terminal strip (terminals 1-22) on the control board. With the function “Run/Stp Ctrl” [215] and “Reset Control” [216], this can be selected for keyboard or serial communication control.

NOTE: The examples in this paragraph do not cover all possibilities. Only the most relevant combinations are given. The starting point is always the default setting (factory) of the AC drive.

Default settings of the Run/Stop/ Enable/Reset functions

The default settings are shown in Fig. 70. In this example the AC drive is started and stopped with DigIn 2 and a reset after trip can be given with DigIn 8.

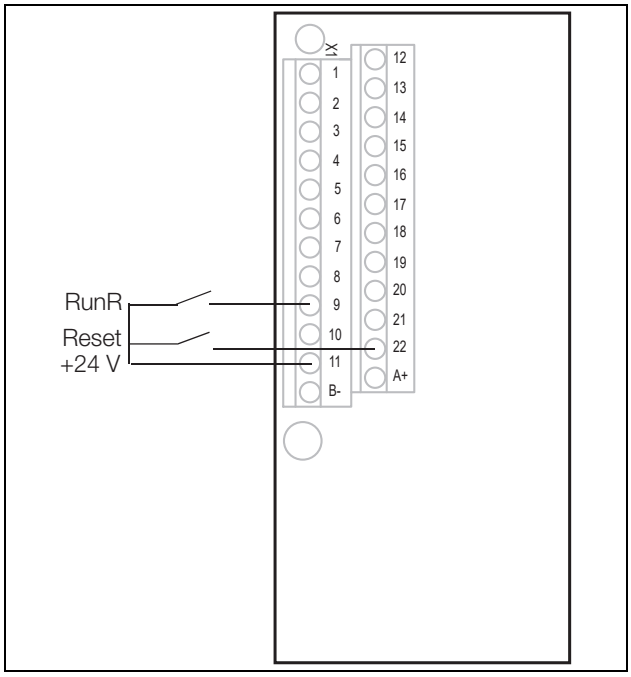

Fig. 70 Default setting Run/Reset commands

The inputs are default set for level-control. The rotation is determined by the setting of the digital inputs.

Enable and Stop functions

Both functions can be used separately or simultaneously. The choice of which function is to be used depends on the application and the control mode of the inputs (Level/Edge [21A]).

NOTE: In Edge mode, at least one digital input must be programmed to “stop”, because the Run commands are only able to start the AC drive.

Enable

Input must be active (HI) to allow any Run signal. If the input is made LOW, the output of the AC drive is immediately disabled and the motor will coast.

CAUTION!
If the Enable function is not programmed to a digital input, it is considered to be active internally.

Stop

If the input is low then the AC drive will stop according to the selected stop mode set in menu [33B] “Stop Mode”. Fig. 71 shows the function of the Enable and the Stop input and the Stop Mode=Decel [33B].

To run the input must be high.

NOTE: Stop Mode=Coast [33B] will give the same behaviour as the Enable input.

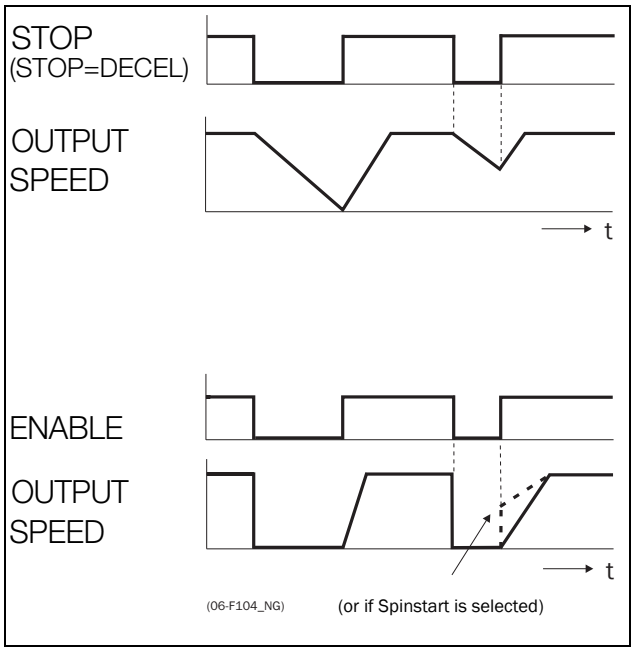

Fig. 71 Functionality of the Stop and Enable input

Reset and Autoreset operation

If the AC drive is in Stop Mode due to a trip condition, the AC drive can be remotely reset by a pulse ("low" to "high" transition) on the Reset input, default on DigIn 8. Depending on the selected control method, a restart takes place as follows:

Level-control

If the Run inputs remain in their position the AC drive will start immediately after the Reset command is given.

Edge-control

After the Reset command is given a new Run command must be applied to start the AC drive again.

Autoreset is enabled if the Reset input is continuously active. The Autoreset functions are programmed in menu "Autoreset [250]".

NOTE: If the control commands are programmed for Keyboard control or Com, Autoreset is not possible.

Run Inputs Level-controlled.

The inputs are set as default for level-control. This means that an input is activated by making the input continuously "High". This method is commonly used if, for example, PLCs are used to operate the AC drive.

CAUTION!
Level-controlled inputs DO NOT comply with the Machine Directive, if the inputs are directly used to start and stop the machine.

The examples given in this and the following paragraphs follow the input selection shown in Fig. 72.

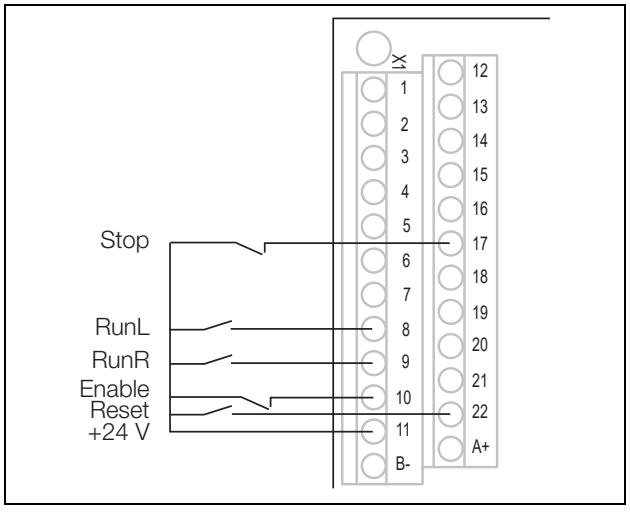

Fig. 72 Example of wiring for Run/Stop/Enable/Reset inputs

The Enable input must be continuously active in order to accept any run-right or run-left command. If both RunR and RunL inputs are active, then the AC drive stops according to the selected Stop Mode. Fig. 73 gives an example of a possible sequence.

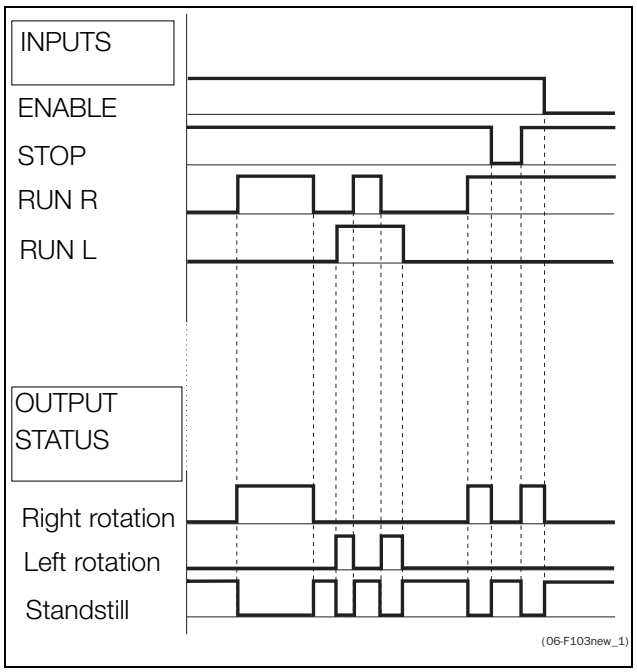

Fig. 73 Input and output status for level-control

Run Inputs Edge-controlled

Menu "[21A] Start signal" Level/Edge must be set to Edge to activate edge control. This means that an input is activated by a "low" to "high" transition or vice versa.

NOTE: Edge-controlled inputs comply with the Machine Directive (see Chapter 8. page 77), if the inputs are directly used for starting and stopping the machine.

See Fig. 72. The Enable and Stop input must be active continuously in order to accept any run-right or run-left command. The last edge (RunR or RunL) is valid. Fig. 74 gives an example of a possible sequence.

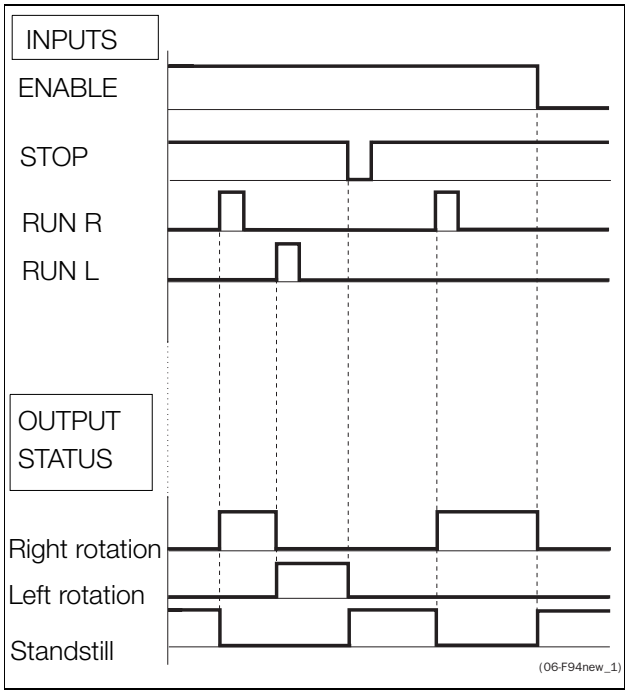

Fig. 74 Input and output status for edge-control

7.3 Performing an Identification Run

To get the optimum performance out of your AC drive/ motor combination, the AC drive must measure the electrical parameters (resistance of stator winding, etc.) of the connected motor. See menu [229] “Motor ID-Run”.

7.4 Using the Control Panel Memory

Data can be copied from the AC drive to the memory in the control panel and vice versa. To copy all data (including parameter set A-D and motor data) from the AC drive to the control panel, select Copy to CP[234], Copy to CP.

To copy data from the control panel to the AC drive, enter the menu [245], Load from CP and select what you want to copy.

The memory in the control panel is useful in applications with AC drives without a control panel and in applications where several AC drives have the same setup. It can also be used for temporary storage of settings. Use a control panel to upload the settings from one AC drive and then move the control panel to another AC drive and download the settings.

NOTE: Load from and copy to the AC drive is only possible when the AC drive is in stop mode.

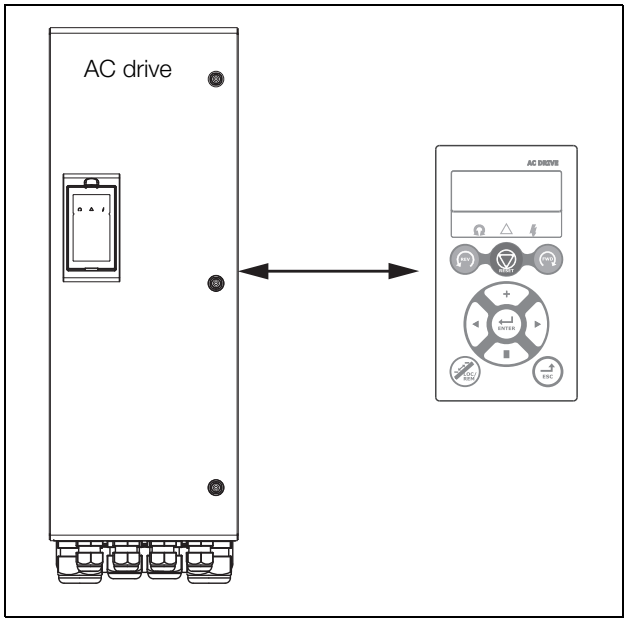

Fig. 75 Copy and load parameters between AC drive and control panel

7.5 Load Monitor and Process Protection [400]

7.5.1 Load Monitor [410]

The monitor functions enable the AC drive to be used as a load monitor. Load monitors are used to protect machines and processes against mechanical overload and underload, such as a conveyer belt or screw conveyer jamming, belt failure on a fan or a pump dry running. The load is measured in the AC drive by the calculated motor shaft torque. There is an overload alarm (Max Alarm and Max Pre-Alarm) and an underload alarm (Min Alarm and Min Pre-Alarm).

The Basic Monitor type uses fixed levels for overload and underload (pre-)alarms over the whole speed range. This function can be used in constant load applications where the torque is not dependent on the speed, e.g. conveyor belt, displacement pump, screw pump, etc.

For applications with a torque that is dependent on the speed, the Load Curve monitor type is preferred. By measuring the actual load curve of the process, characteristically over the range of minimum speed to maximum speed, an accurate protection at any speed can be established.

The max and min alarm can be set for a trip condition. The pre-alarms act as a warning condition. All the alarms can be monitored on the digital or relay outputs.

The autoset function automatically sets the 4 alarm levels whilst running: maximum alarm, maximum pre-alarm, minimum alarm and minimum pre-alarm.

Fig. 76 gives an example of the monitor functions for constant torque applications.

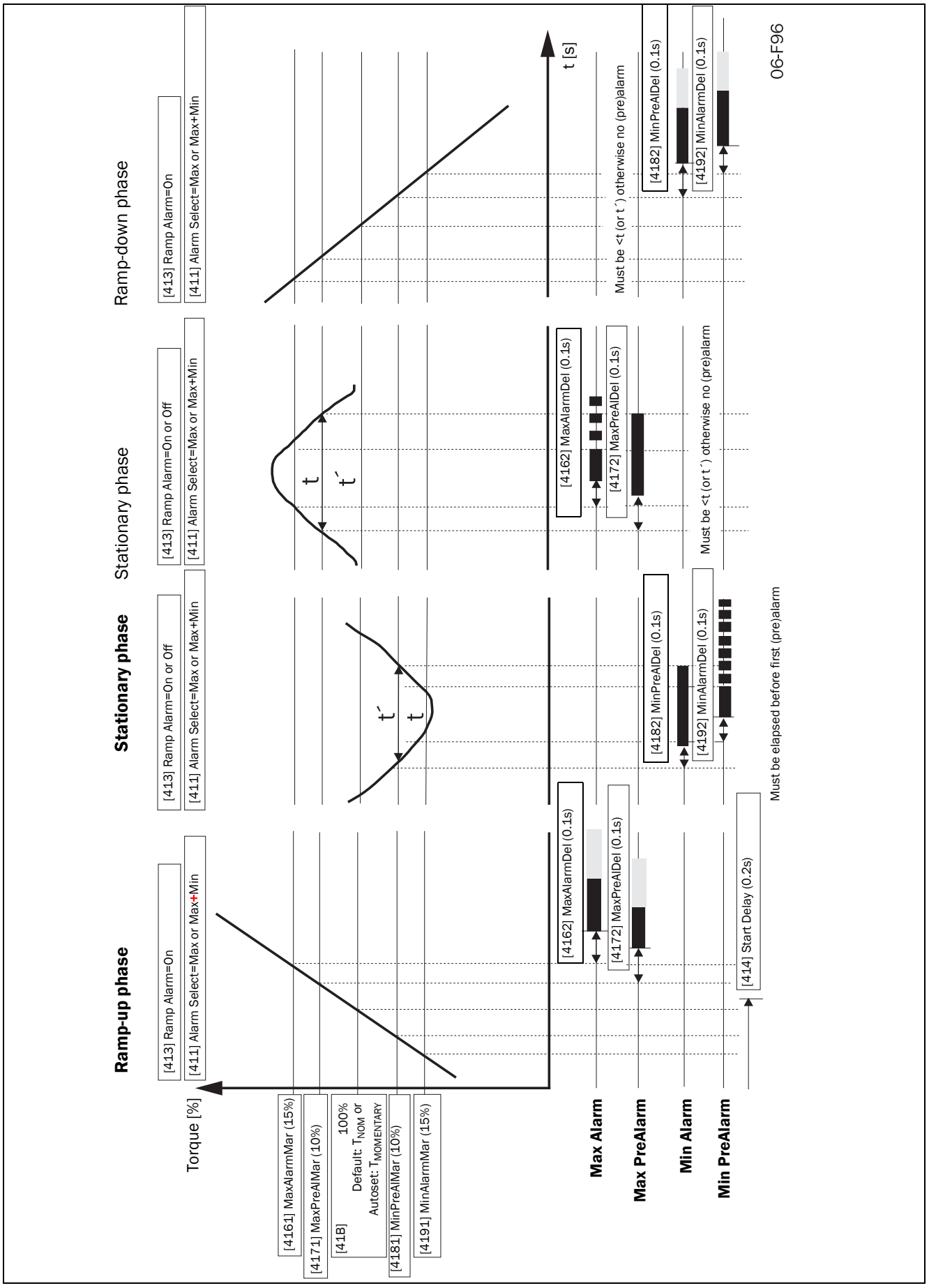
Ramp-up phase
Stationary phase
Ramp-down phase
Torque [%]
t [s]
[413] Ramp Alarm=On
[411] Alarm Select=Max or Max+Min
[413] Ramp Alarm=On or Off
[411] Alarm Select=Max or Max+Min
[413] Ramp Alarm=On or Off
[411] Alarm Select=Max or Max+Min
[413] Ramp Alarm=On
[411] Alarm Select=Max or Max+Min
t
t´
t´
t
[4161] MaxAlarmMar (15%)
[4171] MaxPreAlMar (10%)
[41B] 100%
Default: T_NOM or
Autoset: T_MOMENTARY
[4181] MinPreAlMar (10%)
[4191] MinAlarmMar (15%)
[4162] MaxAlarmDel (0.1s)
[4172] MaxPreAlDel (0.1s)
[4182] MinPreAlDel (0.1s)
[4192] MinAlarmDel (0.1s)
[414] Start Delay (0.2s)
Must be elapsed before first (pre)alarm
Must be <t (or t´) otherwise no (pre)alarm
Must be <t (or t´) otherwise no (pre)alarm
Max Alarm
Max PreAlarm
Min Alarm
Min PreAlarm
06-F96

Fig. 76

7.6 Pump function

7.6.1 Introduction

A maximum of 4 pumps can be controlled with the standard AC drive.

If I/O Board options are installed, a maximum of 7 pumps can be controlled. The I/O Board can also be used as a general extended I/O.

The Pump Control function is used to control a number of drives (pumps, fans, etc., with a maximum of 3 additional drives per I/O-board connected) of which one is always driven by the AC drive. Other names for these kind of controllers are 'Cascade controller' or 'Hydrophore controller'.

Depending on the flow, pressure or temperature, additional pumps can be activated via the appropriate signals from the output relays of the AC drive and/or the I/O Board. The system is developed in such a way that one AC drive will be the master of the system.

Select a relay on the control board or on an option board. The relays are set to functions for controlling pumps. In the pictures in this section, the relays are named R:Function, e.g. R:SlavePump1, which means a relay on the control board or on a option board set to function SlavePump1.

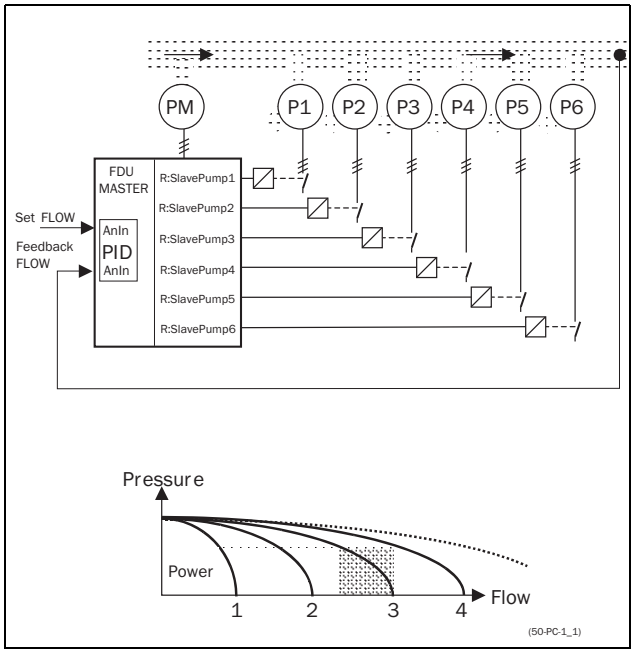

Fig. 77 Flow control with pump control option

All additional pumps can be activated via an AC drive, soft starter, Y/ Δ or D.O.L. switches.

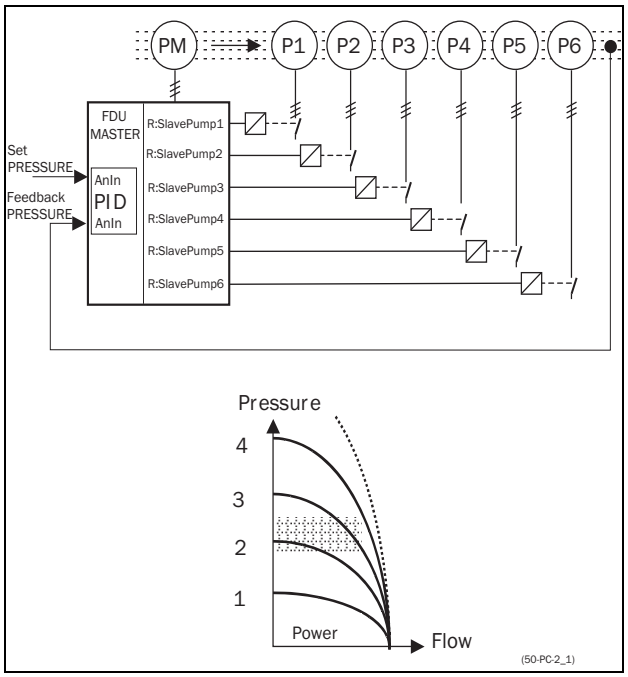

Fig. 78 Pressure control with pump control option

Pumps in parallel will operate as a flow controller, See Fig. 77.

Pumps in a series will operate as a pressure controller see Fig. 78. The basic control principle is shown in Fig. 79.

NOTE: Read this instruction manual carefully before commencing installation, connecting or working with the AC drive with Pump Control option.

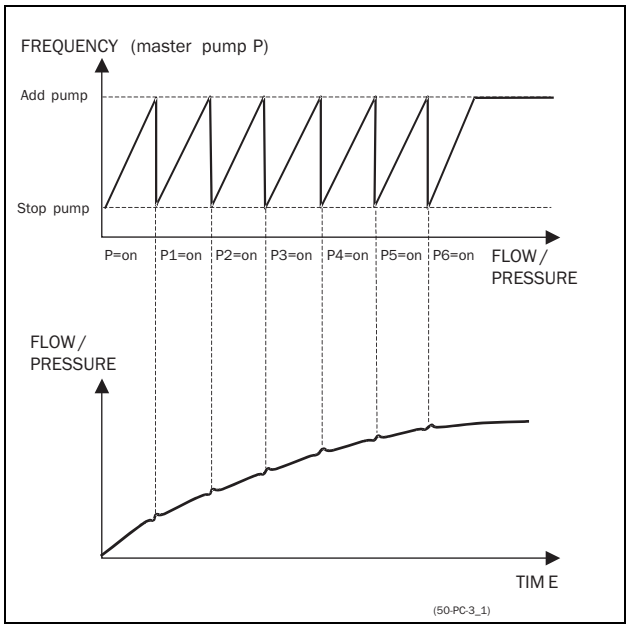

Fig. 79 Basic Control principle

7.6.2 Fixed MASTER

This is the default setting of the Pump Control. The AC drive controls the Master pump which is always running. The relay outputs start and stop the other pumps P1 to P6, depending on flow/pressure. In this configuration, a maximum of 7 pumps can be controlled, see Fig. 80. To equalize the lifetime of the additional pumps it is possible to select the pumps depending on the run time history of each pump.

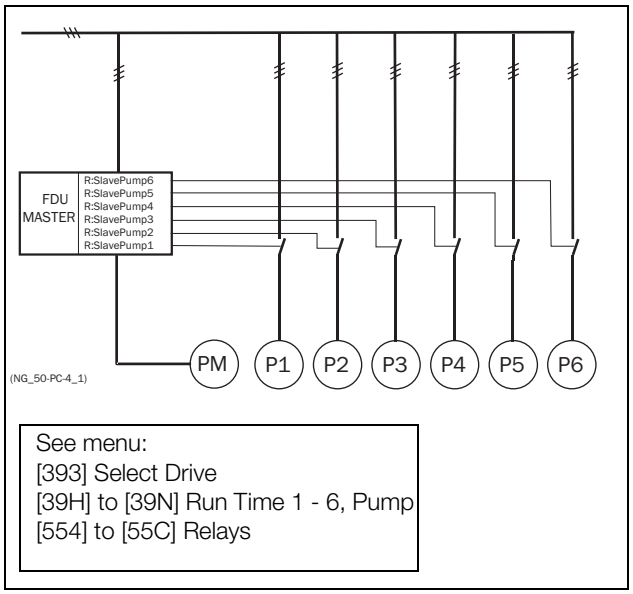

Fig. 80 Fixed MASTER control

NOTE: The pumps MAY have different powers, however the MASTER pump MUST always be the largest.

7.6.3 Alternating MASTER

With this function the Master pump is not fixed to the AC drive all the time. After the AC drive is powered up or started again after a stop or sleep mode the Master pump is selected via the relay set to function Master Pump. section 7.6.7 on page 73 shows a detailed wiring diagram with 3 pumps. The purpose of this function is that all pumps are used equally, so the lifetime of all pumps, including the Master pump, will be equalized. Maximum 6 pumps can be controlled with this function.

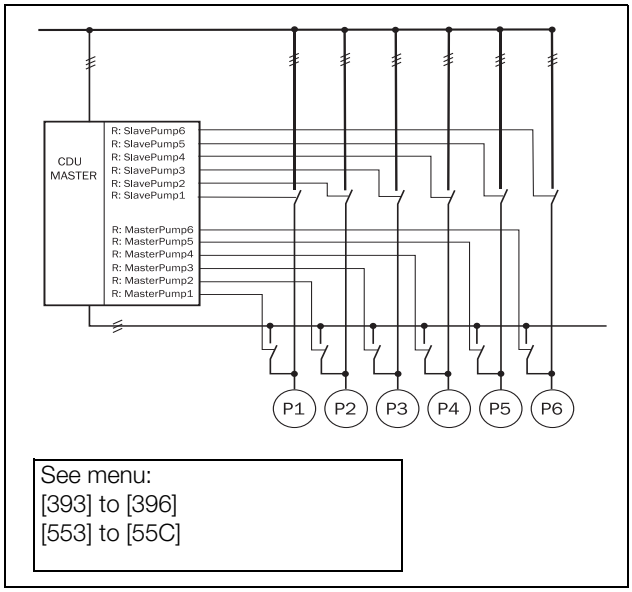

Fig. 81 Alternating MASTER Control

NOTE: The pumps MUST have all the same power.

7.6.4 Feedback 'Status' input

In this example, the additional pumps are controlled by an different kind of drive (e.g. soft starter, frequency inverter, etc.). The digital inputs on the I/O Board can be programmed as a "Error" input for each pump. If a drive fails, the digital input will monitor this and the PUMP CONTROL option will not use that particular drive anymore and automatically switch to another drive. This means that the control continues without using this (faulty) drive. This function can also be used to manually stop a particular pump for maintenance purposes, without shutting down the whole pump system. Of course the maximum flow/pressure is then limited to the maximum pump power of the remaining pumps.

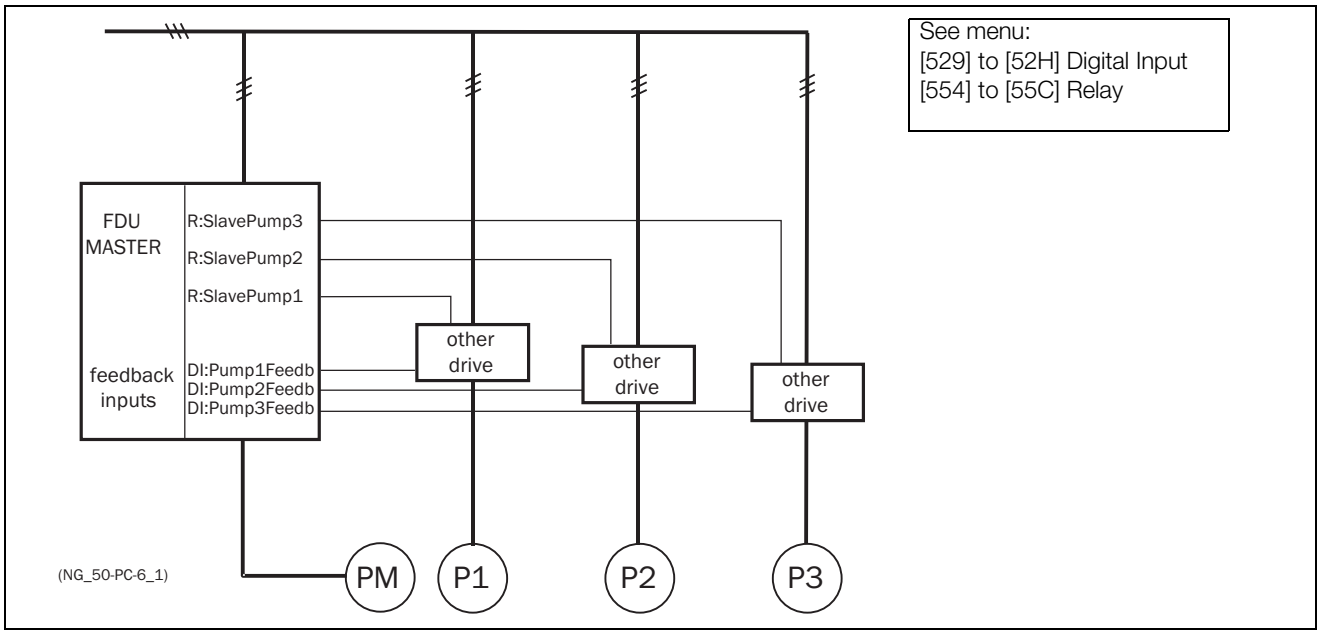

Fig. 82 Feedback "Status" input

7.6.5 Fail safe operation

Some pump systems must always have a minimum flow or pressure level, even if the frequency inverter is tripped or damaged. So at least 1 or 2 (or maybe all) additional pumps must keep running after the inverter is powered down or tripped. This kind of "safe" pump operation can be obtained by using the NC contacts of the pump control relays. These can be programmed for each individual additional pump. In this example, pumps P5 and P6 will run at maximum power if the inverter fails or is powered down.

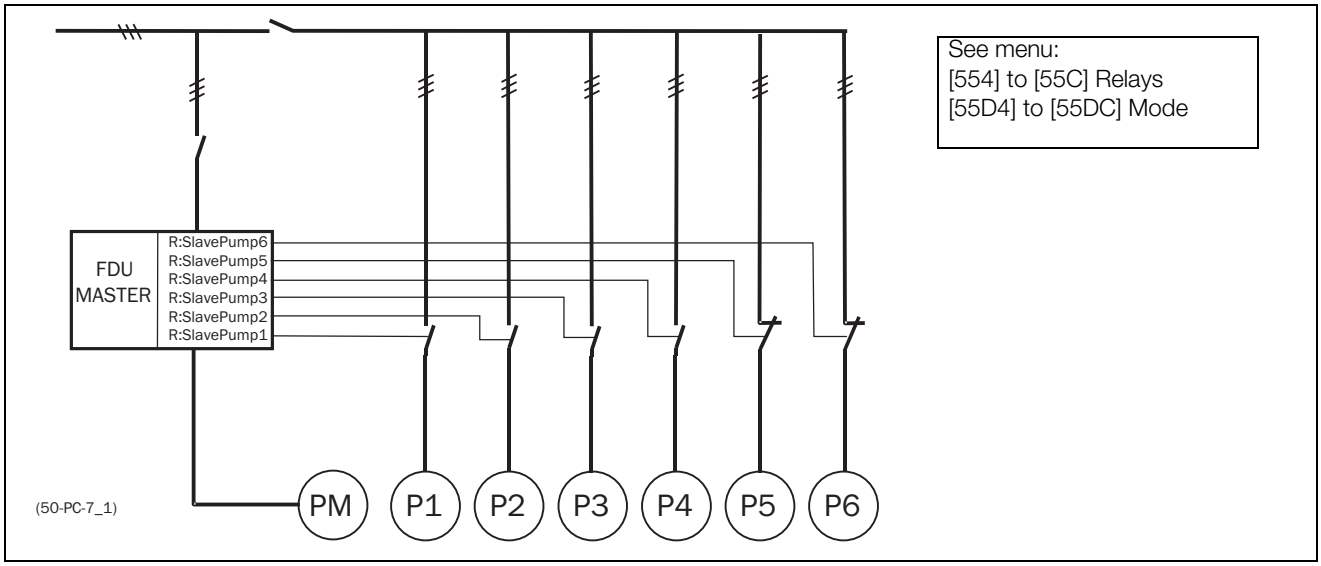

Fig. 83 Example of "Fail safe" operation

7.6.6 PID control

When using the Pump Control option, it is mandatory to activate the PID controller function. Analogue inputs AnIn1 to AnIn4 can be set as functions for PID set values and/or feedback values.

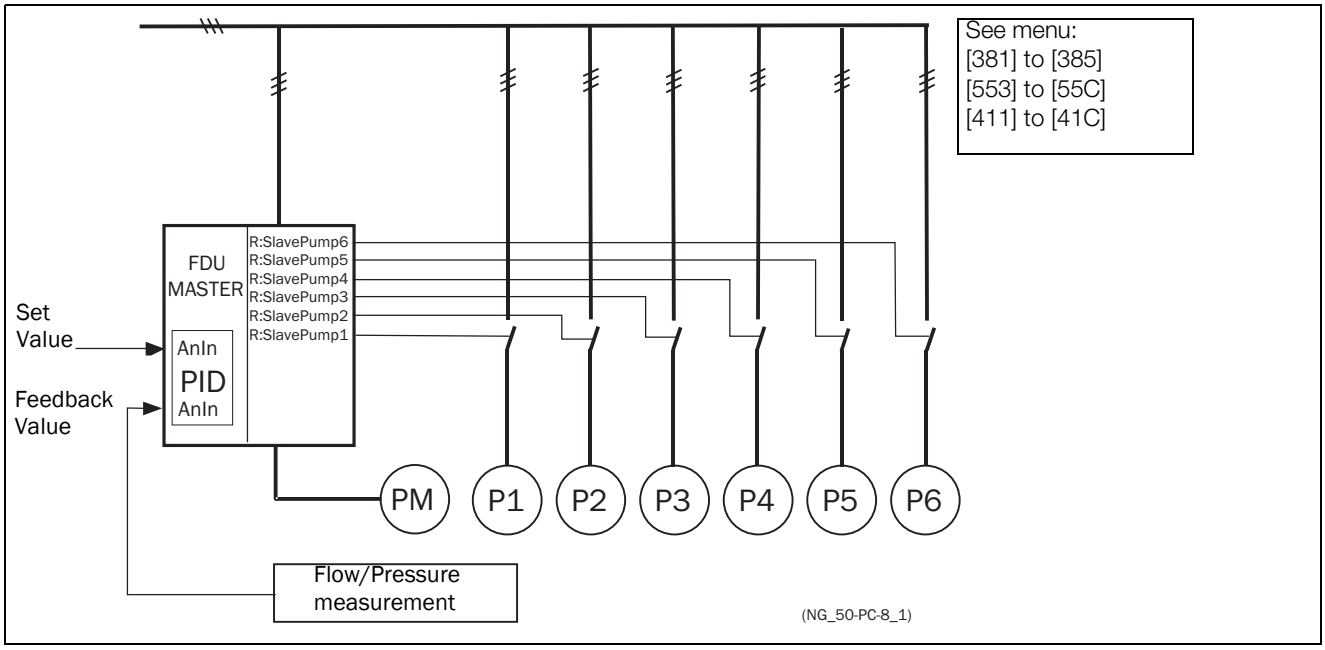

Fig. 84 PID control

7.6.7 Wiring Alternating Master

Fig. 85 and Fig. 86 show the relay functions MasterPump1-6 and SlavePump1-6. The Master and Additional contactors also interlock with each other to prevent dual powering of the pump and damage to the inverter. (K1M/K1S, K2M/K2S, K3M/K3S). Before running, the SX-V will select a pump to be Master, depending on the pump run times.

CAUTION!
The wiring for the Alternating Master control needs special attention and should be wired exactly as described here, to avoid destructive short circuit at the output of the inverter.

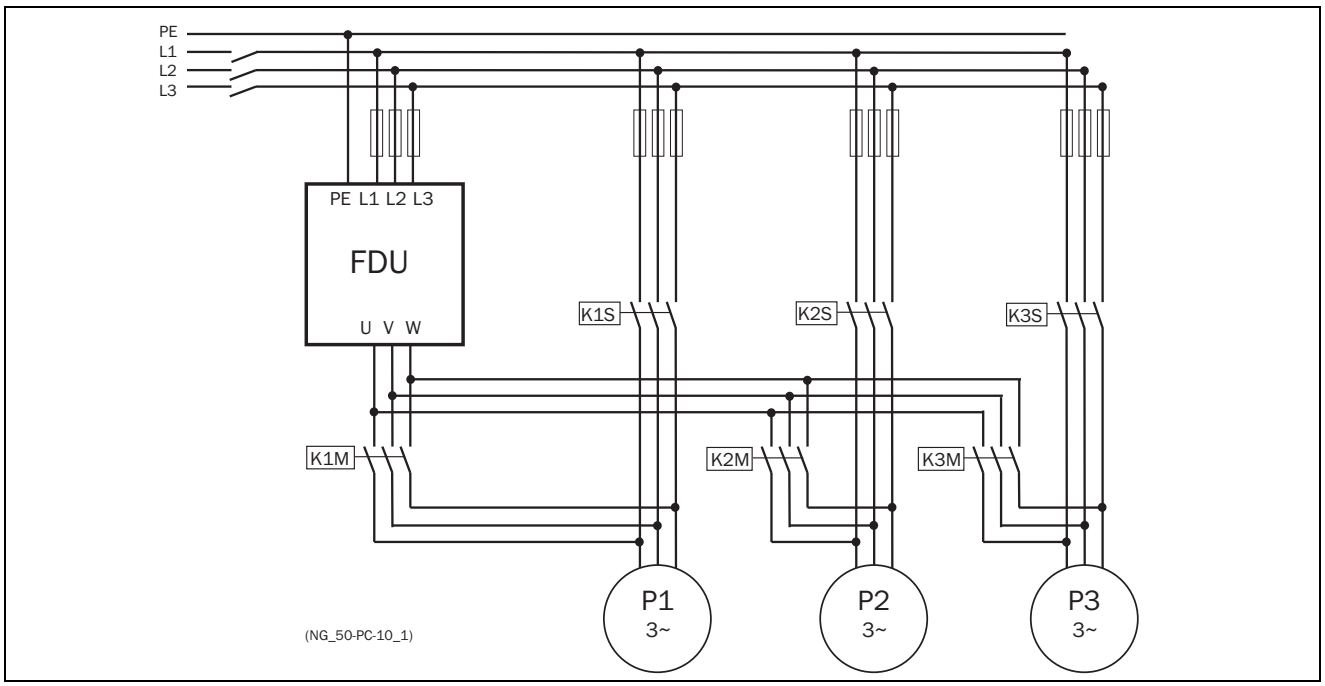

Fig. 85 Power connections for Alternating MASTER circuit with 3 pumps

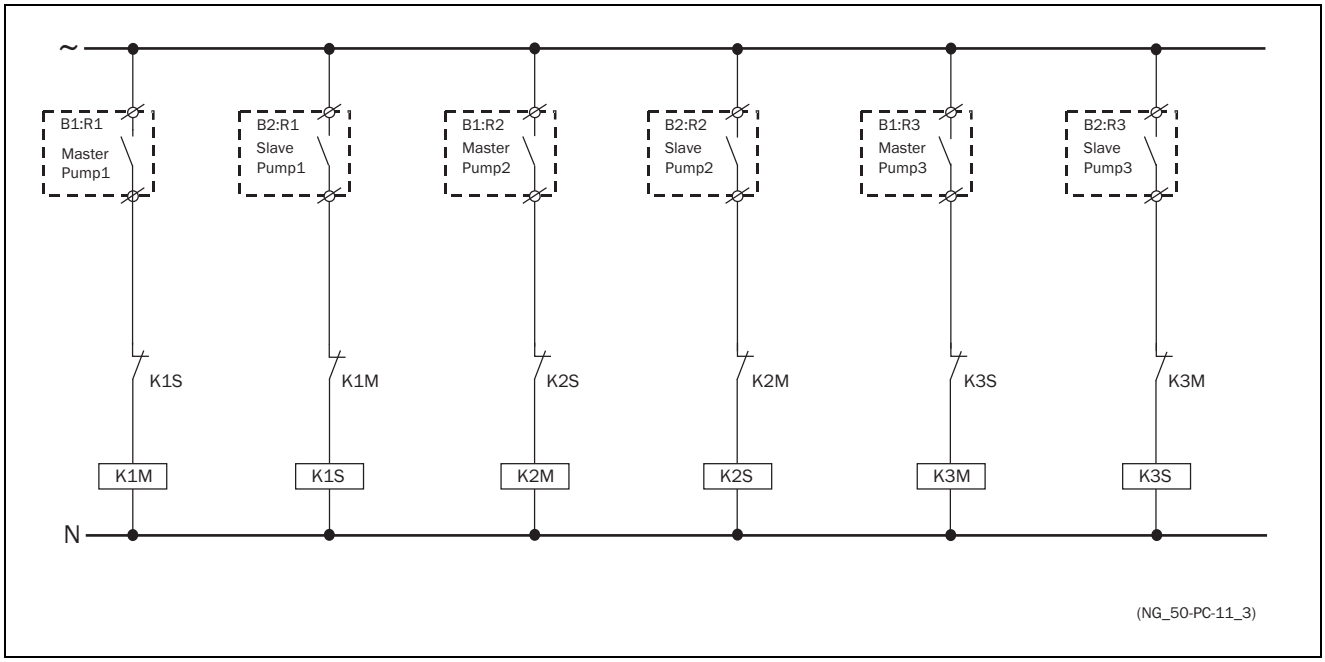

Fig. 86 Control connections for Alternating MASTER circuit with 3 pumps

7.6.8 Checklist And Tips

1. Main Functions

Start by choosing which of the two main functions to use:
- "Alternating MASTER" function
In this case the “Master” pump can be alternated, although this function needs slightly more complicated wiring than the “Fixed MASTER” function described below. The I/O Board option is necessary.
- "Fixed MASTER" function:
One pump is always the master, only the additional pumps alternate.
Notice that there is a big difference in the wiring of the system between these main functions, so it not possible to switch between these 2 functions later on. For further information see section 7.6.2, page 70.

2. Number of pumps/drives

If the system consists of 2 or 3 pumps the I/O Board option is not needed. However, this does mean that the following functions are not then possible:
- "Alternating MASTER" function
- With isolated inputs
With the I/O Board option installed, the maximum number of pumps is:
- 6 pumps if "Alternating MASTER" function is selected. (see section 7.6.3 on page 70)
- 7 pumps if "Fixed MASTER" function is selected. (see section 7.6.2, page 70)

3. Pump size

- "Alternating MASTER" function:
The sizes of the pumps must be equal.
- "Fixed MASTER" function:
The pumps may have different power sizes, but the master pump (SX-V) must always have the greatest power.

4. Programming the Digital inputs

If the digital inputs are used, the digital input function must be set to Drive feedback.

5. Programming the Relay outputs

After the Pump controller is switched on in menu [391] the number of drives (pumps, fans, etc.) must be set in menu [392] (Number of Drives). The relays themselves must be set to the function SlavePump1-6 and if Alternate master is used, MasterPump1-6 as well.

6. Equal Pumps

If all pumps are equal in power size it is likely that the Upper band is much smaller than the Lower band, because the maximum pump discharge of the master pump is the same if the pump is connected to the mains (50Hz). This can give a very narrow hysteresis causing an unstable control area in the flow/pressure. By setting the maximum frequency of the inverter only slightly above 50Hz it means that the master pump has a slightly bigger pump discharge than the pump on the mains. Of course caution is essential in order to prevent the master pump running at a higher frequency for a longer period of time, which in turn prevents the master pump from overloading.

7. Minimum Speed

With pumps and fans it is normal to use a minimum speed, because at lower speed the discharge of the pump or fan will be low until 30-50% of the nominal speed (depending on size, power, pump properties, etc.). When using a minimum speed, a much smoother and better control range of the whole system will be achieved.

7.6.9 Functional Examples of Start/ Stop Transitions

Starting an additional pump

This figure shows a possible sequence with all levels and functions involved when a additional pump is started by means of the pump control relays. The starting of the second pump is controlled by one of the relay outputs. The relay in this example starts the pump directly on line. Of course other start/stop equipment, like a soft starter, could be controlled by the relay output.

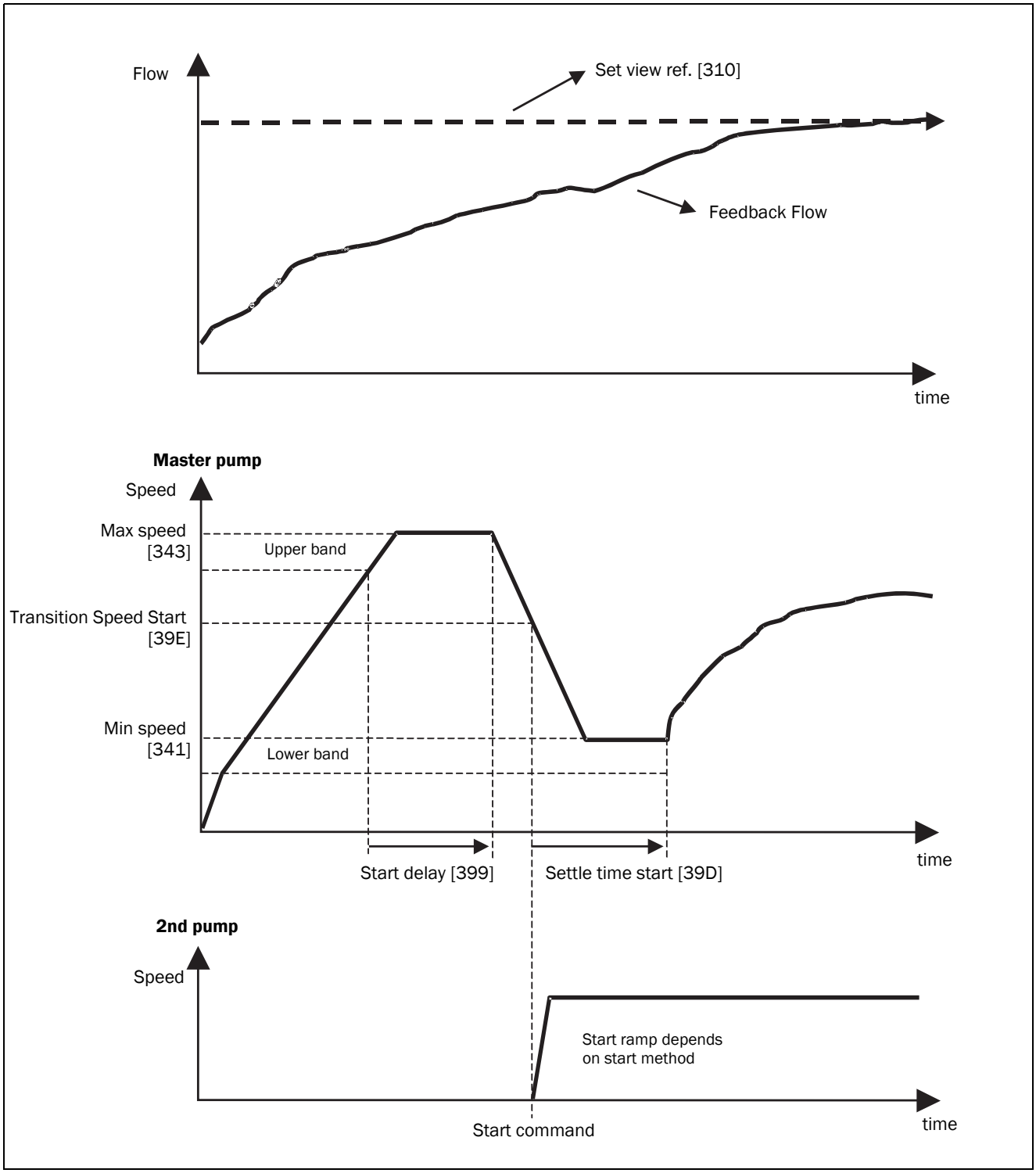

Fig. 87 Time sequence starting an additional pump

Stopping an additional pump

This figure shows a possible sequence with all levels and functions involved when an additional pump is stopped by means of the pump control relays. The stopping of the second pump is controlled by one of the relay outputs. The relay in this example stops the pump directly on line. Of course other start/stop equipment like a soft starter could, like a softstarter, be controlled by the relay output.

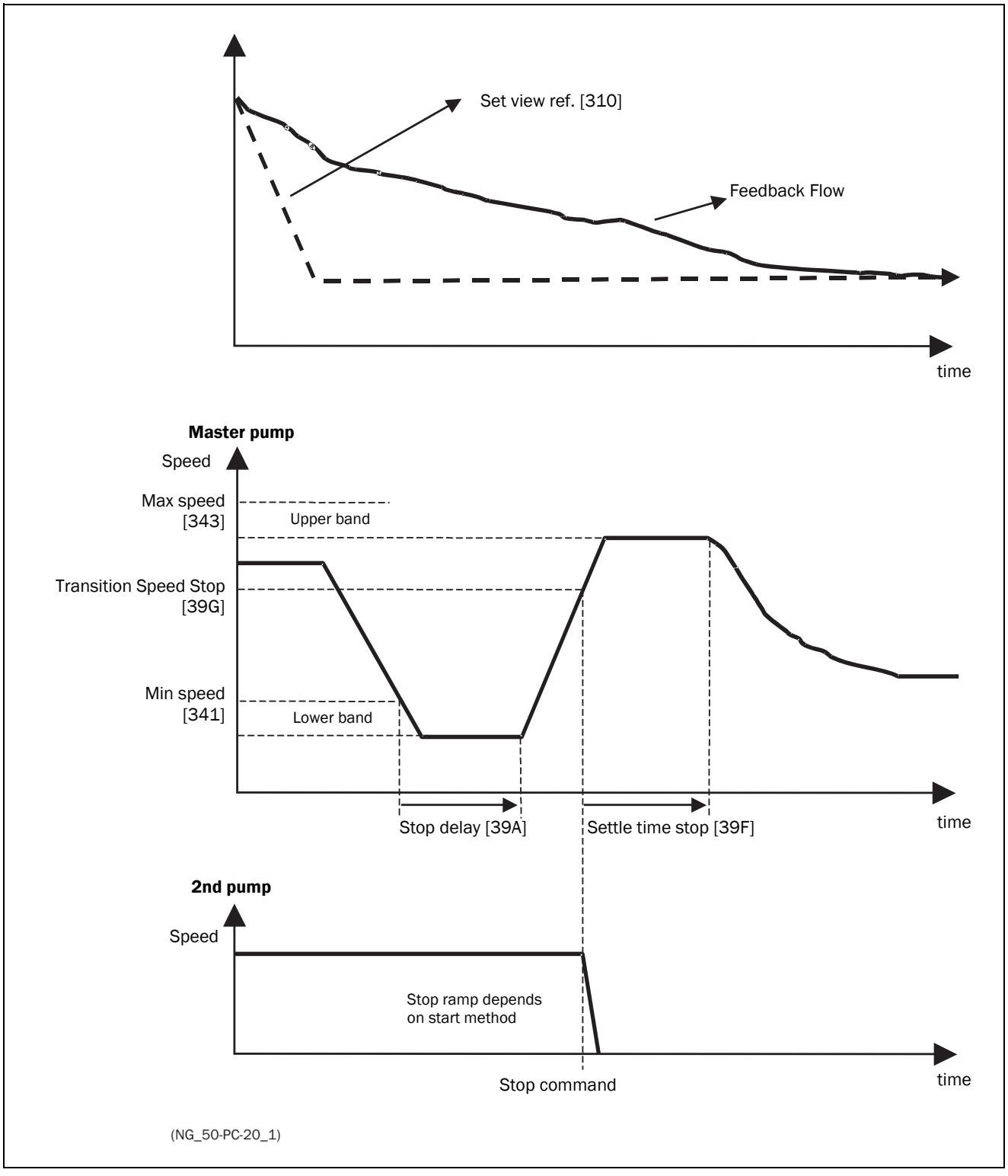

Fig. 88 Time sequence stopping an additional pump

8. EMC and standards

8.1 EMC standards

The AC drive complies with the following standards:

EN(IEC)61800-3:2004 Adjustable speed electronic power drive systems, part 3, EMC product standards:

Standard: Category C3, for systems of rated supply voltage< 1000 VAC, intended for use in the second environment.

Optional: Category C2 for systems of rated supply voltage <1.000 V, which is neither a plug in device nor a movable device and, when used in the first environment, is intended to be installed and commissioned only by experienced person with the necessary skills in installing and/or commissioning AC drives including their EMC aspects.

8.2 Stop categories and emergency stop

The following information is important if emergency stop circuits are used or needed in the installation where a AC drive is used. EN 60204-1 defines 3 stop categories:

Category 0: Uncontrolled STOP:

Stopping by switching off the supply voltage. A mechanical stop must be activated. This STOP may not be implemented with the help of a AC drive or its input/output signals.

Category 1: Controlled STOP:

Stopping until the motor has come to rest, after which the mains supply is switched off. This STOP may not be implemented with the help of a AC drive or its input/output signals.

Category 2: Controlled STOP:

Stopping while the supply voltage is still present. This STOP can be implemented with each of the AC drives STOP command.

WARNING!
EN 60204-1 specifies that every machine must be provided with a category 0 stop. If the application prevents this from being implemented, this must be explicitly stated. Furthermore, every machine must be provided with an Emergency Stop function. This emergency stop must ensure that the voltage at the machine contacts, which could be dangerous, is removed as quickly as possible, without resulting in any other danger. In such an Emergency Stop situation, a category 0 or 1 stop may be used. The choice will be decided on the basis of the possible risks to the machine.

NOTE: With OSTO_100 a “Safe Torque Off (STO)” stop according EN-IEC 62061:2005, AC:2010, A1:2013, A2:2015 and EN-ISO 13849-:2015, can be achieved.
See section 13.13 Safe Stop option (page 238).

8.3 EcoDesign product information per EU Directive 2019/1781

8.3.1 EcoDesign data for 400 V - IP20/54 drive units

Model	Rated supply voltage (V)	Rated supply frequency (Hz)	Rated output current (A)	Indicative motor rated power output (kW)	Rated apparent output power (kVA)	Maximum operating temp (deg C)	Efficiency level	Stand-by losses (%)	Relative power losses: $P_{loss\_}$ rel (f;l), in % related to Rated apparent output power (f = Relative motor stator frequency, l = Relative torque producing current)							
									Ploss_rel (10;25)	Ploss_rel (10;50)	Ploss_rel (10;100)	Ploss_rel (50;25)	Ploss_rel (50;50)	Ploss_rel (50;100)	Ploss_rel (90;50)	Ploss_rel (90;100)
SX-A4011-EF/EV	400	50	25	11	17,3	40	IE2	0,09	1,0	1,1	1,6	1,0	1,2	1,8	1,4	2,3
SX-A4015-EF/EV			30	15	20,8		IE2	0,08	0,9	1,0	1,5	1,0	1,1	1,8	1,3	2,3
SX-A4018-EF/EV			36	18,5	24,9		IE2	0,07	0,9	1,0	1,4	0,9	1,1	1,7	1,2	2,1
SX-A4022-EF/EV			45	22	31,2		IE2	0,05	0,8	0,9	1,4	0,8	1,0	1,7	1,2	2,1
SX-A4030-EF/EV			58	30	40,2		IE2	0,04	0,7	0,9	1,4	0,8	1,0	1,7	1,1	2,1
SX-A4037-EF/EV			72	37	49,9		IE2	0,04	0,7	0,9	1,3	0,8	1,0	1,6	1,1	2,1
SX-A4045-EF/EV			88	45	61,0		IE2	0,03	0,7	0,8	1,3	0,7	0,9	1,6	1,1	2,2
SX-A4055-EF/EV			105	55	72,7		IE2	0,03	0,7	0,8	1,3	0,7	0,9	1,5	1,0	2,0
SX-A4075-EF/EV			142	75	98,4		IE2	0,03	0,8	0,9	1,3	0,8	1,0	1,6	1,1	1,9
SX-A4090-EF/EV			171	90	118,5		IE2	0,02	0,7	0,9	1,3	0,8	1,0	1,6	1,1	2,0
SX-A4110-EF/EV			205	110	142,0		IE2	0,02	0,7	0,8	1,3	0,7	0,9	1,5	1,0	1,8
SX-A4132-EF/EV			244	132	169,0		IE2	0,02	0,7	0,8	1,3	0,7	0,9	1,6	1,0	1,9
SX-*4160-E3F/E3V			293	160	203,0		IE2	0,01	0,6	0,7	1,1	0,6	0,8	1,4	0,9	1,8
SX-*4200-E3F/E3V			365	200	252,9		IE2	0,01	0,6	0,7	1,1	0,6	0,8	1,3	0,9	1,6
SX-*4220-EF/EV			430	220	297,9		IE2	0,02	0,7	0,8	1,3	0,7	0,9	1,5	1,0	1,9
SX-*4250-EF/EV			500	250	346,4		IE2	0,01	0,7	0,8	1,3	0,7	0,9	1,6	1,0	1,9
SX-*4315-EF/EV			600	315	415,7		IE2	0,02	0,7	0,8	1,3	0,7	0,9	1,5	1,0	1,8
SX-*4355-EF/EV			650	355	450,3		IE2	0,01	0,7	0,8	1,3	0,7	0,9	1,5	1,0	1,8
SX-*4400-EF/EV			750	400	519,6		IE2	0,01	0,7	0,8	1,3	0,7	0,9	1,6	1,0	1,9
SX-*4450-EF/EV			860	450	595,8		IE2	0,01	0,7	0,8	1,3	0,7	0,9	1,5	1,0	1,9
SX-*4560-EF/EV			1000	560	692,8		IE2	0,01	0,7	0,8	1,3	0,7	0,9	1,6	1,0	1,9
SX-*4630-EF/EV			1150	630	796,7		IE2	0,01	0,7	0,8	1,2	0,7	0,9	1,5	1,0	1,8

Model	Rated supply voltage (V)	Rated supply frequency (Hz)	Rated output current (A)	Indicative motor rated power output (kW)	Rated apparent output power (kVA)	Maximum operating temp (deg C)	Efficiency level	Stand-by losses (%)	Relative power losses: $P_{loss_}$rel (f;I), in % related to Rated apparent output power (f = Relative motor stator frequency, I = Relative torque producing current)							
									Ploss_rel (10;25)	Ploss_rel (10;50)	Ploss_rel (10;100)	Ploss_rel (50;25)	Ploss_rel (50;50)	Ploss_rel (50;100)	Ploss_rel (90;50)	Ploss_rel (90;100)
SX-*4710-EF/EV	400	50	1250	710	866,0	40	IE2	0,01	0,7	0,8	1,3	0,7	0,9	1,6	1,0	1,9
SX-*4750-EF/EV			1350	750	935,3		IE2	0,01	0,7	0,8	1,3	0,7	0,9	1,5	1,0	1,8
SX-*4800-EF/EV			1500	800	1039,2		IE2	0,01	0,7	0,8	1,3	0,7	0,9	1,6	1,0	1,9
SX-*4900-EF/EV			1750	900	1212,4		IE2	0,01	0,7	0,8	1,3	0,7	0,9	1,6	1,0	1,9

* = A (IP20) or D (IP54). Relative power losses: Ploss_rel (f;I), in % related to Rated apparent output power (f = Relative motor stator frequency, l = Relative torque producing current).

8.3.2 EcoDesign data for 400 V - IP54 drive units

Model	Rated supply voltage (V)	Rated supply frequency (Hz)	Rated output current (A)	Indicative motor rated power output (kW)	Rated apparent output power (kVA)	Maximum operating temp (deg C)	Efficiency level	Stand-by losses (%)	Relative power losses: $P_{loss_}$rel (f;I), in % related to Rated apparent output power (f = Relative motor stator frequency, I = Relative torque producing current)							
									Ploss_rel (10;25)	Ploss_rel (10;50)	Ploss_rel (10;100)	Ploss_rel (50;25)	Ploss_rel (50;50)	Ploss_rel (50;100)	Ploss_rel (90;50)	Ploss_rel (90;100)
SX-D40P7-EF/EV	400	50	2,5	0,75	1,7	40	IE2	0,90	4,4	4,6	4,8	4,5	4,6	5,0	4,7	5,2
SX-D41P5-EF/EV			4	1,5	2,8		IE2	0,56	3,1	3,2	3,5	3,1	3,3	3,7	3,4	4,0
SX-D42P2-EF/EV			6	2,2	4,2		IE2	0,38	2,3	2,4	2,8	2,4	2,5	3,0	2,7	3,4
SX-D43P0-EF/EV			7,5	3	5,2		IE2	0,30	2,1	2,2	2,5	2,1	2,3	2,8	2,5	3,3
SX-D44P0-EF/EV			9,5	4	6,6		IE2	0,24	1,9	2,1	2,4	2,0	2,2	2,8	2,4	3,3
SX-D45P5-EF/EV			13	5,5	9,0		IE2	0,17	1,5	1,6	2,1	1,5	1,7	2,3	1,8	2,7
SX-D47P5-EF/EV			18	7,5	12,5		IE2	0,13	1,2	1,3	1,8	1,2	1,4	2,1	1,6	2,5
SX-D4011-EF/EV			26	11	18,0		IE2	0,09	1,0	1,1	1,5	1,0	1,2	1,8	1,3	2,1
SX-D4015-EF/EV			31	15	21,5		IE2	0,07	0,9	1,0	1,5	0,9	1,1	1,7	1,2	2,1
SX-D4018-EF/EV			37	18,5	25,6		IE2	0,06	0,8	1,0	1,5	0,9	1,1	1,6	1,2	2,0
SX-D4022-EF/EV			46	22	31,9		IE2	0,05	0,8	0,9	1,4	0,8	1,0	1,6	1,1	2,0
SX-D4030-EF/EV			61	30	42,3		IE2	0,05	0,8	0,9	1,3	0,8	1,0	1,6	1,1	2,0
SX-D4037-EF/EV			74	37	51,3		IE2	0,04	0,7	0,8	1,3	0,8	0,9	1,5	1,1	2,0
SX-D4045-EF/EV			90	45	62,4		IE2	0,04	0,9	1,1	1,5	1,0	1,1	1,7	1,3	2,0
SX-D4055-EF/EV			109	55	75,5		IE2	0,03	0,9	1,0	1,5	0,9	1,1	1,7	1,2	2,0
SX-D4075-EF/EV			146	75	101,2		IE2	0,03	0,8	0,9	1,4	0,8	1,0	1,6	1,1	2,0

Model	Rated supply voltage (V)	Rated supply frequency (Hz)	Rated output current (A)	Indicative motor rated power output (kW)	Rated apparent output power (kVA)	Maximum operating temp (deg C)	Efficiency level	Stand-by losses (%)	Relative power losses: $P_{loss_}$rel (f;I), in % related to Rated apparent output power (f = Relative motor stator frequency, I = Relative torque producing current)							
									Ploss_rel (10;25)	Ploss_rel (10;50)	Ploss_rel (10;100)	Ploss_rel (50;25)	Ploss_rel (50;50)	Ploss_rel (50;100)	Ploss_rel (90;50)	Ploss_rel (90;100)
SX-D4090-EF/EV	400	50	175	90	121,2	40	IE2	0,02	0,7	0,9	1,3	0,8	0,9	1,6	1,1	1,9
SX-D4110-EF/EV			210	110	145,5		IE2	0,02	0,7	0,8	1,3	0,7	0,9	1,5	1,0	1,8
SX-D4132-EF/EV			250	132	173,2		IE2	0,02	0,7	0,8	1,3	0,7	0,9	1,6	1,0	1,9
SX-D4160-EF/EV			295	160	204,4		IE2	0,02	0,6	0,7	1,1	0,6	0,8	1,3	0,9	1,8
SX-D4200-EF/EV			365	200	252,9		IE2	0,01	0,6	0,7	1,1	0,6	0,8	1,3	0,9	1,6

8.3.3 EcoDesign data for 690 V - IP20/54 drive units

Model	Rated supply voltage (V)	Rated supply frequency (Hz)	Rated output current (A)	Indicative motor rated power output (kW)	Rated apparent output power (kVA)	Maximum operating temp (deg C)	Efficiency level	Stand-by losses (%)	Relative power losses: $P_{loss_}$rel (f;I), in % related to Rated apparent output power (f = Relative motor stator frequency, I = Relative torque producing current)							
									Ploss_rel (10;25)	Ploss_rel (10;50)	Ploss_rel (10;100)	Ploss_rel (50;25)	Ploss_rel (50;50)	Ploss_rel (50;100)	Ploss_rel (90;50)	Ploss_rel (90;100)
SX-*62P2-EF/EV	690	50	3	2,2	3,6	40	IE2	0,62	3,8	3,9	4,3	3,8	4,0	4,3	4,0	4,5
SX-*63P0-EF/EV			4	3	4,8		IE2	0,47	3,4	3,5	3,9	3,4	3,6	4,0	3,6	4,2
SX-*64P0-EF/EV			6	4	7,2		IE2	0,31	2,5	2,6	2,9	2,5	2,7	3,1	2,7	3,3
SX-*65P5-EF/EV			8	5,5	9,6		IE2	0,23	2,0	2,1	2,5	2,0	2,1	2,6	2,2	2,7
SX-*67P5-EF/EV			10	7,5	12,0		IE2	0,19	1,7	1,9	2,3	1,7	1,9	2,4	2,0	2,5
SX-*6011-EF/EV			13	11	15,5		IE2	0,14	1,4	1,5	1,9	1,4	1,5	2,0	1,6	2,2
SX-*6015-EF/EV			18	15	21,5		IE2	0,10	1,0	1,1	1,5	1,0	1,1	1,6	1,2	1,7
SX-*6018-EF/EV			21	18,5	25,1		IE2	0,09	1,0	1,1	1,5	1,0	1,1	1,6	1,2	1,8
SX-*6022-EF/EV			25	22	29,9		IE2	0,07	0,9	1,0	1,4	0,9	1,0	1,5	1,1	1,7
SX-*6030-EF/EV			33	30	39,4		IE2	0,06	1,2	1,4	1,9	1,2	1,4	2,0	1,5	2,3
SX-*6037-EF/EV			42	37	50,2		IE2	0,05	1,0	1,2	1,7	1,0	1,2	1,9	1,3	2,2
SX-*6045-EF/EV			50	45	59,8		IE2	0,04	0,8	1,0	1,5	0,8	1,0	1,6	1,1	1,9
SX-*6055-EF/EV			58	55	69,3		IE2	0,04	0,8	0,9	1,4	0,8	1,0	1,6	1,1	1,9
SX-D6090-EF/EV			90	90	107,6		IE2	0,03	0,8	1,0	1,5	0,8	1,0	1,6	1,1	1,8
SX-D6110-EF/EV			109	110	130,3		IE2	0,02	0,8	0,9	1,4	0,8	1,0	1,6	1,0	1,8
SX-D6132-EF/EV			146	132	174,5		IE2	0,02	0,7	0,9	1,4	0,7	0,9	1,5	1,0	1,7
SX-D6160-EF/EV			175	160	209,1		IE2	0,01	0,6	0,8	1,3	0,7	0,9	1,4	0,9	1,6
SX-D6200-EF/EV			200	200	239,0		IE2	0,01	0,6	0,8	1,3	0,6	0,8	1,4	0,9	1,6

Model	Rated supply voltage (V)	Rated supply frequency (Hz)	Rated output current (A)	Indicative motor rated power output (kW)	Rated apparent output power (kVA)	Maximum operating temp (deg C)	Efficiency level	Stand-by losses (%)	Relative power losses: $P_{loss_}$rel (f;I), in % related to Rated apparent output power (f = Relative motor stator frequency, I = Relative torque producing current)							
									Ploss_rel (10;25)	Ploss_rel (10;50)	Ploss_rel (10;100)	Ploss_rel (50;25)	Ploss_rel (50;50)	Ploss_rel (50;100)	Ploss_rel (90;50)	Ploss_rel (90;100)
SX-*6250-EF/EV	690	50	250	250	298,8	40	IE2	0,02	0,7	0,8	1,3	0,7	0,9	1,5	1,0	1,6
SX-*6315-EF/EV			300	315	358,5		IE2	0,01	0,7	0,8	1,3	0,7	0,9	1,5	0,9	1,7
SX-*6355-EF/EV			375	355	448,2		IE2	0,01	0,6	0,8	1,3	0,6	0,8	1,4	0,9	1,6
SX-*6400-EF/EV			400	400	478,0		IE2	0,01	0,6	0,8	1,3	0,6	0,8	1,4	0,9	1,6
SX-*6450-EF/EV			430	450	513,9		IE2	0,01	0,7	0,9	1,4	0,7	0,9	1,5	1,0	1,7
SX-*6500-EF/EV			500	500	597,6		IE2	0,01	0,6	0,8	1,3	0,6	0,8	1,4	0,9	1,6
SX-*6600-EF/EV			600	600	717,1		IE2	0,01	0,6	0,8	1,3	0,6	0,8	1,4	0,9	1,6
SX-*6630-EF/EV			650	630	776,8		IE2	0,01	0,6	0,8	1,3	0,7	0,9	1,4	0,9	1,6
SX-*6710-EF/EV			720	710	860,5		IE2	0,01	0,6	0,8	1,3	0,6	0,8	1,4	0,9	1,6
SX-*6800-EF/EV			800	800	956,1		IE2	0,01	0,6	0,8	1,3	0,6	0,8	1,4	0,9	1,6
SX-*6900-EF/EV			900	900	1075,6		IE2	0,01	0,6	0,8	1,3	0,6	0,8	1,4	0,9	1,6
SX-*61K0-EF/EV			1000	1000	1195,1		IE2	0,01	0,6	0,8	1,3	0,6	0,8	1,4	0,9	1,6

* = A (IP20) or D (IP54). Relative power losses: Ploss_rel (f;I), in % related to Rated apparent output power (f = Relative motor stator frequency, l = Relative torque producing current).

9. Communication

The AC drive provides possibility for different types of serial communication.

- Galvanic isolated Modbus RTU via RS-485 interface on X1 terminal on control board. See “4. Control Connections” on page 47.
- Modbus RTU via RS-232 interface behind the control panel (not galvanic isolated).
- Wireless interfaces provided by the connected control panel.
- Control panel with WiFi (optional) provides Modbus/TCP.
- Control panel with BLE (optional) enables connectivity with mobile application.
- Fieldbuses as Profibus DP, DeviceNET and CANopen.
- Industrial Ethernet as Modbus/TCP, Profinet IO, EtherCAT, and EtherNet/IP. For available communication options see “13. Options” on page 233.

9.1 Modbus RTU

Preferably use the isolated RS-485 interface for serial communication. This port is galvanically isolated.
The protocol used for data exchange is based on the Modbus RTU protocol, originally developed by Modicon. The physical connection is RS-232/485. The AC drive acts as a slave with selectable address in a master-slave configuration. The communication is half-duplex. It has a standard non return zero (NRZ) format.

The baud rate of the R-S485 interface is adjustable between 2400 to 115200.

The character frame format (always 11 bits) has:

- one start bit
- eight data bits
- two stop bits
- no parity

The AC drive has also an asynchronous serial communication interface behind the control panel. Please note that this port is not galvanically isolated.

It is possible to temporarily connect a personal computer with for example the software EmoSoftCom (programming and monitoring software) to the RS-232 connector on the control panel. This can be useful when copying parameters between AC drives etc. For permanent connection of a personal computer you have to use one of the communication option boards.

NOTE: This RS-232 port is not isolated.

WARNING!
Correct and safe use of a RS232 connection depends on the ground pins of both ports being the same potential. Problems can occur when connecting two ports of e.g. machinery and computers where both ground pins are not the same potential. This may cause hazardous ground loops that can destroy the RS232 ports.

The RS232 connection behind the control panel is not galvanically isolated.

The RS232/485 option board from Omron is galvanically isolated.

Note that the control panel RS232 connection can safely be used in combination with commercial available isolated USB to RS232 converters.

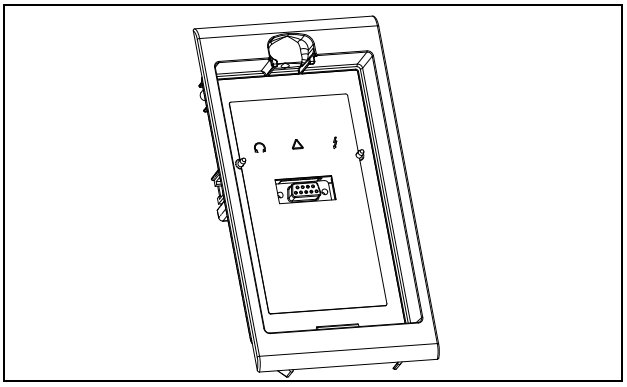

Fig. 89 RS-232 connector behind the control panel

9.2 Parameter sets

Communication information for the different parameter sets.

The different parameter sets in the AC drive have the following DeviceNet instance numbers, Profibus slot/index numbers, Profinet IO index and EtherCAT index numbers:

Param. set	Modbus/ DeviceNet Instance number	Profibus Slot/Index	Profinet IO index	EtherCAT and CANopen index (hex)
A	43001–43899	168/160 to 172/38	19385 - 20283	4bb9 - 4f3b
B	44001–44899	172/140 to 176/18	20385 - 21283	4fa1 - 5323
C	45001–45899	176/120 to 179/253	21385 - 22283	5389 - 5706
D	46001–46899	180/100 to 183/233	22385 - 23283	5771 - 5af3

Parameter set A contains parameters 43001 to 43899. The parameter sets B, C and D contains the same type of information. For example parameter 43123 in parameter set A contain the same type of information as 44123 in parameter set B.

9.3 Motor data

Communication information for the different motors.

Motor	Modbus/ DeviceNet Instance number	Profibus Slot/ Index	Profinet IO index	EtherCAT and CANopen index (hex)
M1	43041–43048	168/200 to 168/207	19425 - 19432	4be1 - 4be8
M2	44041–44048	172/180 to 174/187	20425 - 20432	4fc9 - 4fd0
M3	45041–45048	176/160 to 176/167	21425 - 21432	53b1 - 53b8
M4	46041–46048	180/140 to 180/147	22425 - 22432	5799 - 57a0

M1 contains parameters 43041 to 43048. The M2, M3, and M4 contains the same type of information. For example parameter 43043 in motor M1 contain the same type of information as 44043 in M2.

9.4 Start and stop commands

Set start and stop commands via serial communication.

Modbus/DeviceNet Instance number	Function
42901	Reset
42902	Run, active together with either RunR or RunL to perform start.
42903	RunR
42904	RunL

Note! Bipolar reference mode is activated if both RunR and RunL is active.

9.5 Reference signal

When menu “Reference Control [214]” is set to “Com” the following parameter data should be used:

Default	0
Range	-16384 to 16384
Corresponding to	-100% to 100% ref

Communication information

Modbus /DeviceNet Instance number	42905
Profibus slot /Index	168/64
EtherCAT index (hex)	4b59
Profinet IO index	19289
Fieldbus format	Int
Modbus format	Int

9.5.1 Process value

It is also possible to send the Process value feedback signal over a bus (e.g. from a process or temperature sensor) for use with PID Process controller [380].

Set menu “Process Source [321]” to F(Bus). Use following parameter data for the process value:

Default	0
Range	-16384 to 16384
Corresponding to	-100% to 100% process value

Communication information

Modbus /DeviceNet Instance number	42906
Profibus slot /Index	168/65
EtherCAT index (hex)	4b5a
Profinet IO index	19290
Fieldbus format	Int
Modbus format	Int

Example:

(See Omron Fielbus manual for detailed information)

We would like to control the AC drive over a bus system using the first two bytes of the Basic Control Message by setting menu “[2661] FB Signal 1” to 49972. Further, we also want to transmit a 16 bit signed reference and a 16 bit process value. This is done by setting menu “[2662] FB Signal 2” to 42905 and menu “[2663] FB Signal 3” to 42906.

NOTE! It is possible to view the transmitted process value in control panel menu Operation [710]. The presented value is depending on settings in menus “Process Min [324]” and “Process Max [325]”.

9.6 Description of the EInt formats

Eint is only used with Modbus-RTU and Modbus-TCP protocols.
A parameter with Eint format can be represented in two different formats (F). Either as a 15 bit unsigned integer format (F= 0) or a Omron floating point format (F=1). The most significant bit (B15) indicates the format used. See detailed description below.
All parameters written to a register may be rounded to the number of significant digits used in the internal system.

The matrix below describes the contents of the 16-bit word for the two different EInt formats:

B15	B14	B13	B12	B11	B10	B9	B8	B7	B6	B5	B4	B3	B2	B1	B0
F=1	e3	e2	e1	e0	m10	m9	m8	m7	m6	m5	m4	m3	m2	m1	m0
F=0	B14	B13	B12	B11	B10	B9	B8	B7	B6	B5	B4	B3	B2	B1	B0

If the format bit (B15) is 0, then all bits may be treated as a standard unsigned integer (UInt)

If the format bit is 1, then is the number interpreted as this:

Value = M * 10^E, where M=m10..m0 represents a two- complement signed mantissa and E= e3..e0 represents a two- complement signed exponent.

NOTE: Parameters with EInt format may return values both as 15 bit unsigned int (F=0) or in Omron floating point (F=1).

Example, resolution

If you write the value 1004 to a register and this register has 3 significant digits, it will be stored as 1000.

In the Omron floating point format (F=1), one 16-bit word is used to represent large (or very small numbers) with 3 significant digits.

If data is read or written as a fixed point (i.e. no decimals) number between 0-32767, the 15 bit Unsigned integer format (F=0) may be used.

Detailed description of Omron floating point format

```
e3-e0 4-bit signed exponent. Gives a value
range:
-8..+7 (binary 1000 .. 0111)
m10-m0 11-bit signed mantissa.Gives a value
range:
-1024..+1023 (binary
10000000000..01111111111)
```

A signed number should be represented as a two complement binary number, like below:

Value Binary

```
-8 1000
-7 1001
..
-2 1110
-1 1111
0 0000
1 0001
2 0010
..
6 0110
7 0111
```

The value represented by the Omron floating point format is m·10e.

To convert a value from the Omron floating point format to a floating point value, use the formula above.

To convert a floating point value to the Omron floating point format, see the C-code example below.

Example, floating point format

The number 1.23 would be represented by this in Omron floating point format,

```
F EEEE MMMMMMMMMMM
1 1110 00001111011
F=1 -> floating point format used
E=-2
M=123
```

The value is then $123x10^{-2} = 1.23$

Example 15bit unsigned int format

The value 72.0 can be represented as the fixed point number 72. It is within the range 0-32767, which means that the 15-bit fixed point format may be used.

The value will then be represented as:

B15	B14	B13	B12	B11	B10	B9	B8	B7	B6	B5	B4	B3	B2	B1	B0
0	0	0	0	0	0	0	0	0	1	0	0	1	0	0	0

Where bit 15 indicates that we are using the fixed point format (F=0).

Programming example:

```
typedef struct
{
  int m:11; // mantissa, -1024..1023
  int e: 4; // exponent -8..7
  unsigned int f: 1; // format, 1->special emoint format
}    eint16;
//---------------------------------------------------------------------------
unsigned short int float_to_eint16(float value)
{
  eint16 etmp;
  int dec=0;

  while (floor(value) != value && dec<16)
  {
     dec++; value*=10;
  }
  if (value>=0 && value<=32767 && dec==0)
     *(short int *)&etmp=(short int)value;
  else if (value>=-1000 && value<0 && dec==0)
  {
     etmp.e=0;
     etmp.f=1;
     etmp.m=(short int)value;
  }
  else
  {
     etmp.m=0;
     etmp.f=1;
     etmp.e=-dec;
     if (value>=0)
        etmp.m=1; // Set sign
     else
        etmp.m=-1; // Set sign
     value=fabs(value);
     while (value>1000)
     {
        etmp.e++; // increase exponent
        value=value/10;
     }
     value+=0.5; // round
     etmp.m=etmp.m*value; // make signed
  }
 return (*(unsigned short int *)&etmp);
}
//---------------------------------------------------------------------------
float eint16_to_float(unsigned short int value)
{
  float f;
  eint16 evalue;

  evalue=*(eint16 *)&value;
  if (evalue.f)
  {
     if (evalue.e>=0)
        f=(int)evalue.m*pow10(evalue.e);
     else
        f=(int)evalue.m/pow10(abs(evalue.e));
  }
  else
     f=value;

  return f;
}
//---------------------------------------------------------------------------
```

10. Operation via the Control Panel

This chapter describes how to use the control panel. The AC drive can be delivered with a control panel or a blank panel.

10.1 General

The control panel displays the status of the AC drive and is used to set all the parameters. It is also possible to control the motor directly from the control panel. The control panel can be built-in or located externally via serial communication.The AC drive can be ordered without the control panel. Instead of the control panel there will be a blank panel.

NOTE: The AC drive can run without the control panel being connected. However the settings must be such that all control signals are set for external use.

10.1.1 Two different control panels

There are two different control panels available for Omron AC drives IP54 and IP20/21 versions. One with 4-line LCD display and one with a 2-line LCD display. Each described in chapter “10.2 Control panel with 4-line display” on page 87 and “10.3 Control panel with 2-line display” on page 92.

10.2 Control panel with 4-line display

This control panel with 4-line display is equipped with real time clock function. This means that actual date and time will be shown at e.g. a trip condition.
There is also an optional Control panel with Bluetooth communication available. See chapter“13. Options” on page 233 for more information.

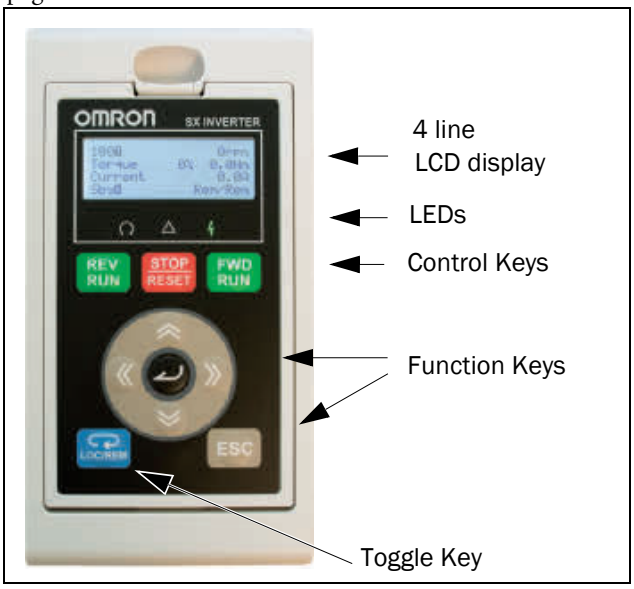

Fig. 90 Control panel with 4 line display, LEDs and Keys.

10.2.1 The display

The display is back lit and consists of 4 rows, each with space for 20 characters. The display is divided into following areas. The different areas in the display are described below:

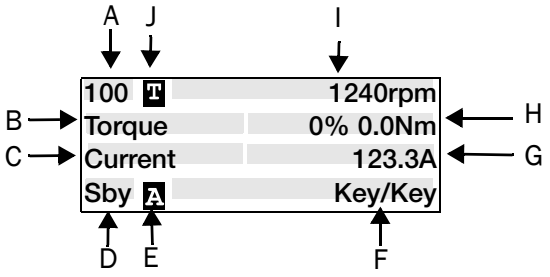

Fig. 91 The display

Area A:Shows the actual menu number (3 or 4 digits).

Area B:Menu name or heading (Except in menus 100+ mode), 8 characters field.

Area C:Edit Cursor if editing or heading in menu[100], 8 characters field.

Area D *:Shows the status of the AC drive (3 digits). The following status indications are possible:

Digits	Description	Bit*
Stp	Motor is stopped	0
Run	Motor runs	1
Acc	Acceleration	2
Dec	Deceleration	3
Trp	Tripped	4
STO	Operating Safe Torque Off, is flashing when activated	5
VL	Operating at voltage limit	6
SL	Operating at speed limit	7
CL	Operating at current limit	8
TL	Operating at torque limit	9
OT	Operating at temperature limit	10
I^2t	Active I^2t protection	11
LV	Operating at low voltage	12
Sby	Operating from Standby power supply	13
LCL	Operating with low cooling liquid level	14
Slp	Sleep mode	15
SPS	Spin start active	16

*) The status shown in Area D on the control panel can be read via a fieldbus or serial communication, e.g. using Modbus address nr 30053.
It is also possible to read all status indications, not just the highest prioritized one, via a fieldbus or serial communication, e.g. using Modbus address nr 30180 and 30182. This information is also shown in EmoSoftCom PC-tool (optional) see menu “Area D stat [72B]”.Area I:Active Motor set M1 - M4 (Set in menu [212]).

Area E:Shows active parameter set: **A**, **B**, **C**, or **D** [241].

Area F:Active control source.

Area G:Parameter value, shows the setting or selection in the active menu, 12 characters field.
This area is empty at the 1st level and 2nd level menu. This area also shows warnings and alarm messages. In some situations this area could indicate “+++” or ” - - -” see further information in the Instruction manual.

Area H:Signal values shown in menu [100], 12 characters field.

Area I:Preferred read-out value (chosen in menu [110])

Area JShows if the menu is in the toggle loop and/or the AC drive is set for Local operation.
T= in Toggle loop
L **T**= in Local operation and Toggle loop
L= Local operation

Area K: First row character 7 show an inverted B **B** in case a Bluetooth connection is active.

Area L: First row character 8 show a WiFi symbol in case a WiFi connection is active.

NOTE:
In area B and area C only 8 characters are available, this means that some texts will be shortened.

10.2.2 Menu [100] Start Window

This menu is displayed at every power-up. During operation, the menu [100] will automatically be displayed when the keyboard is not operated for 5 minutes.

Menu "[100] Start Window" displays the settings made in menu "[110], 1st line", "[120], 2nd line" and "[130], 3rd line".

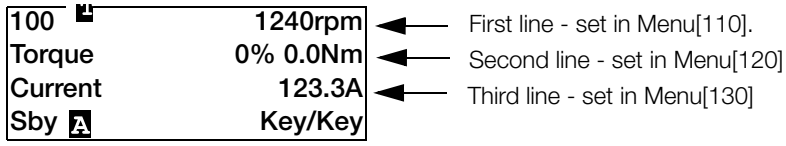

Extended signal monitoring

If you hold the ESC key when in menu [100] following window will appear, as long as the key is pressed.
Here First, Second and Third line are shown as selected in menu [100].
Then additional information will be displayed, selected in the menus [140], [150] and [160] according to below.

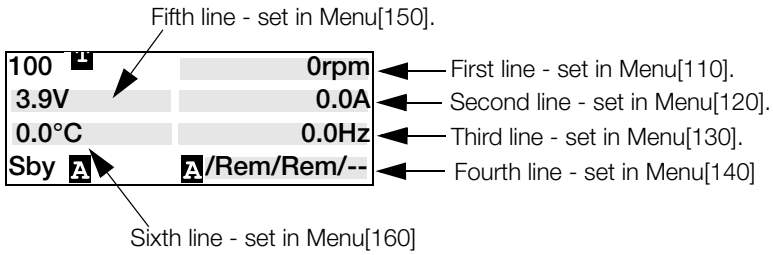

Use menu "[170] View mode" to select active type of menu [100] presentation, select if "Normal 100" or "Always 100+" Extended signal monitoring" shall be shown at power-up. A third choice is menu "Normal100wo" = menu [100] without explaining text at second and third line.

10.2.3 Editing mode

All other menus (read and read/write menus) are used in following way.

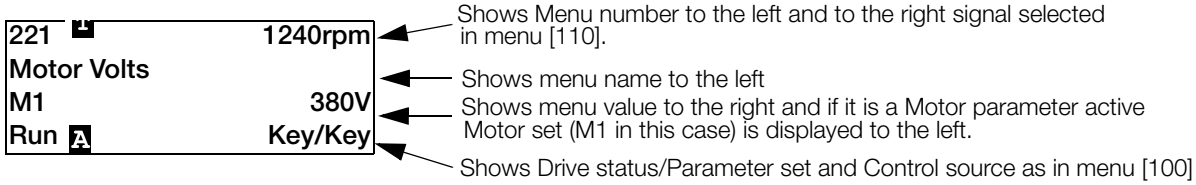

During editing, preferred view will not be displayed and the cursor will appear blinking to the left. See also below.

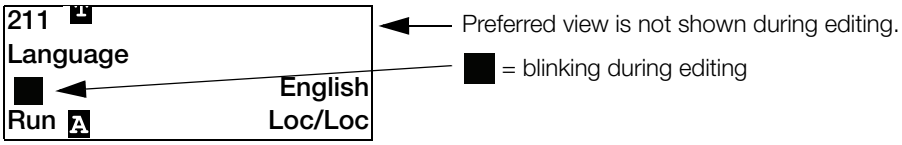

10.2.4 Fault logger

As real-time clock is available, line 2 will show trip/warning message and line three will show date and time when the trip condition occurred.

810	1240rpm
Ext trip	
2017-01-25	12:34.40
Run A	Rem/Rem

10.2.5 Real Time clock

In this 4 line Control panel (PPU) there is a built in Real time clock. This means that actual date and time will be shown at e.g. a trip condition. There is a built-in capacitor to be able to keep the clock running if the power disappear. In case of loss of power, the backup time for the Real time clock function is at least 60 days.
Actual date and time will be set from factory. Date and time is shown and can be set in following menus.

Clock [930]

This menu group displays actual time and date, read only. Time and date are factory set to CET (Central European mean time). Adjust if required in following sub-menus.

930	1240rpm
Clock	
2017-01-23	12:34.40
Run A	Key/Key

Time [931]

Actual time, displayed as HH:MM:SS. Adjustable setting.

931	1240rpm
Time	
	12:34.40
Run A	Key/Key

Unit	hh:mm:ss (hours: minutes: seconds)

Date [932]

Actual date, displayed as YYYY-MM-DD. Adjustable setting.

932	1240rpm
Date	
	2017-01-23
Run A	Key/Key

Unit:	YYYY-MM-DD (year-month-day)

Weekday [933]

Display of actual weekday, read only.

933	1240rpm
Weekday	
	Monday
Run A	Key/Key

10.2.6 LED indicators

The symbols on the control panel have the following functions:

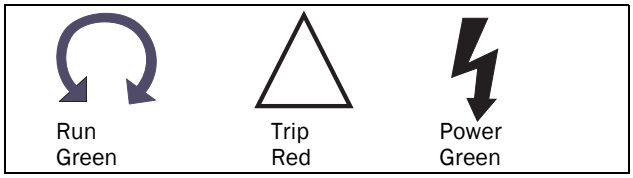

Fig. 92 LED indications

Table 29 LED indication

Symbol	Function		
	ON	FLASHING	OFF
POWER (green)	Power on	----------	Power off
TRIP (red)	AC drive tripped	Warning/Limit	No warning or trip
RUN (green)	Motor shaft rotates	Motor speed increase/ decrease	Motor stopped

10.2.7 Control keys

The control keys are used to give the Run, Stop or Reset commands directly. As default these keys are disabled, set for remote control. Activate the control keys by selecting Keyboard in the menus “Ref Control [214]”, “Run/Stop Control [215]” and “Reset Ctrl [216]”.

If the Enable function is programmed on one of the digital inputs, this input must be active to allow Run/Stop commands from the control panel.

Table 30 Control keys

REV	RUN L:	gives a start with left rotation
RESET	STOP/RESET:	stops the motor or resets the AC drive after a trip
FWD	RUN R:	gives a start with right rotation

NOTE: It is not possible to simultaneously activate the Run/Stop commands from the keyboard and remotely from the terminal strip (terminals 1-22). Exception is the JOG-function which can give start command, see “ Jog Speed [348]” on page 155.

10.2.8 The Toggle and Loc/Rem Key

This key has two functions: Toggle and switching between Loc/Rem function.

Press one second to use the toggle function

Press and hold the toggle key for more than five seconds to switch between Local and Remote function, depending on the settings in [2171] and [2172].

When editing values, the toggle key can be used to change the sign of the value, see section 10.6, page 96.

Toggle function

Using the toggle function makes it possible to easily step through selected menus in a loop. The toggle loop can contain a maximum of ten menus. As default the toggle loop contains the menus needed for Quick Setup. You can use the toggle loop to create a quick-menu for the parameters that are most importance to your specific application.

NOTE: Do not keep the Toggle key pressed for more than five seconds without pressing either the +, - or Esc key, as this may activate the Loc/Rem function of this key instead. See menu [217].

Add a menu to the toggle loop

1. Go to the menu you want to add to the loop.
2. Press the Toggle key and keep it pressed while pressing the + key.

Delete a menu from the toggle loop

1. Go to the menu you want to delete using the toggle key.
2. Press the Toggle key and keep it pressed while pressing the - key.

Delete all menus from the toggle loop

1. Press the Toggle key and keep it pressed while pressing the Esc key.
2. Confirm with Enter.

Default toggle loop

Fig. 93 shows the default toggle loop. This loop contains the necessary menus that need to be set before starting. Press Toggle to enter menu [211] then use the Next key to enter the sub menus [212] to [21A] and enter the parameters. When you press the Toggle key again, menu [221] is displayed.

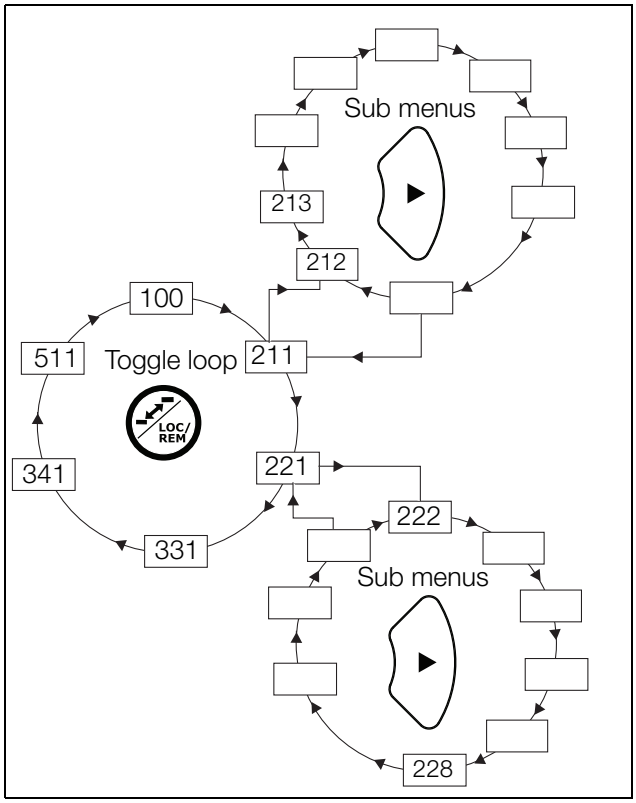

Fig. 93 Toggle loop example.

Indication of menus in toggle loop

Menus included in the toggle loop are indicated with a in area B in the display.

Loc/Rem function

The Loc/Rem function of this key is disabled as default. Enable the function in menu [2171] and/or [2172].

With the function Loc/Rem you can change between local and remote control of the AC drive from the control panel. The function Loc/Rem can also be changed via the DigIn, see menu “Digital inputs [520]”.

Change control mode

1. Press the Loc/Rem key for five seconds, until Local? or Remote? is displayed.
2. Confirm with Enter.
3. Cancel with Esc.

Local mode

Local mode is used for temporary operation. When switched to LOCAL operation, the AC drive is controlled via the defined Local operation mode, i.e. [2171] and [2172]. The actual status of the AC drive will not change, e.g. Run/Stop conditions and the actual speed will remain exactly the same. When the AC drive is set to Local operation, the display will show in area B in the display.

Remote mode

When the AC drive is switched to REMOTE operation, the AC drive will be controlled according to selected control methods in the menu's "Reference Control [214]", "Run/ Stop Control [215]" and "Reset Control [216]".
To monitor the actual Local or Remote status of the AC drive control, a "Loc/Rem" signal is available on the Digital Outputs or Relays. When the AC drive is set to Local, the signal on the DigOut or Relay will be active/high, in Remote the signal will be inactive/low. See menu "Digital Outputs [540]" and "Relays [550]".

10.2.9 Function keys

The function keys operate the menus and are also used for programming and read-outs of all the menu settings.

Table 31 Function keys

ENTER	ENTER key:	- step to a lower menu level - confirm a changed setting
ESC	ESCAPE key:	- step to a higher menu level - ignore a changed setting, without confirming
◄	PREVIOUS key:	- step to a previous menu within the same level - go to more significant digit in edit mode
►	NEXT key:	- step to a next menu within the same level - go to less significant digit in edit mode
-	- key:	- decrease a value - change a selection
+	+ key:	- increase a value - change a selection
LOC/ REM	TOGGLE and LOC/REM key:	- Toggle between menus in the toggle loop - Switching between local and remote control - Change the sign of a value

10.3 Control panel with 2-line display

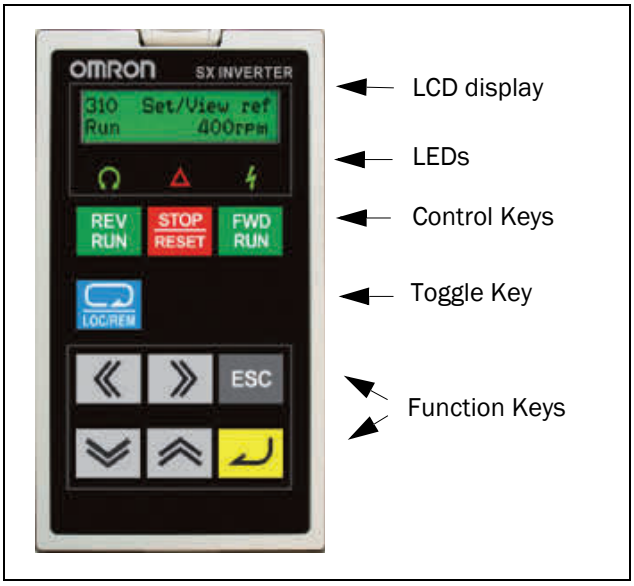

Fig. 94 Control panel display, LEDs and Keys.

10.3.1 The display

The display is back lit and consists of 2 rows, each with space for 16 characters. The display is divided into six areas.

The different areas in the display are described below:

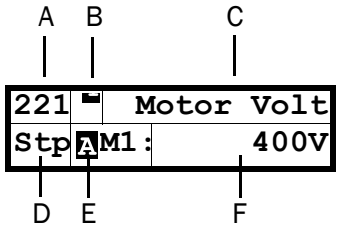

Fig. 95 The display

Area A:Shows the actual menu number (3 or 4 digits).

Area BShows if the menu is in the toggle loop or the AC drive is set for Local operation.

Area C:Shows the heading of the active menu.

Area D *:Shows the status of the AC drive (3 digits). The following status indications are possible:

Digits	Description	Bit*
Stp	Motor is stopped	0
Run	Motor runs	1
Acc	Acceleration	2
Dec	Deceleration	3
Trp	Tripped	4
SST	Operating Safe Stop, is flashing when activated	5
VL	Operating at voltage limit	6
SL	Operating at speed limit	7
CL	Operating at current limit	8

Digits	Description	Bit*
TL	Operating at torque limit	9
OT	Operating at temperature limit	10
I^2t	Active I^2t protection	11
LV	Operating at low voltage	12
Sby	Operating from Standby power supply	13
LCL	Operating with low cooling liquid level	14
Slp	Sleep mode	15
SPS	Spin start active	16

*) The status shown in Area D on the control panel can be read via a fieldbus or serial communication, e.g. using Modbus address nr 30053.
It is also possible to read all status indications, not just the highest prioritized one, via a fieldbus or serial communication, e.g. using Modbus address nr 30180 and 30182. This information is also shown in EmoSoftCom PC-tool (optional) see menu "Area D stat [72B]".

Area E:Shows active parameter set and if it is a motor parameter.

Area F:Shows the setting or selection in the active menu. This area is empty at the 1st level and 2nd level menu. This area also shows warnings and alarm messages. In some situations this area could indicate "+++" or " - - -" please see further information in Chapter 10.3.2 page 93

Fig. 96 Example 1st level menu

Fig. 97 Example 2nd level menu

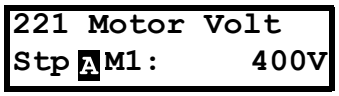

Fig. 98 Example 3d level menu

Fig. 99 Example 4th level menu

10.3.2 Indications on the display

The display can indicate "+++" or "- - -" if a parameter is out of range. In the AC drive there are parameters which are dependent on other parameters. For example, if the speed reference is 500 and the maximum speed value is set to a value below 500, this will be indicated with "+++" on the display. If the minimum speed value is set over 500, "- - -" is displayed.

10.3.3 LED indicators

The symbols on the control panel have the following functions:

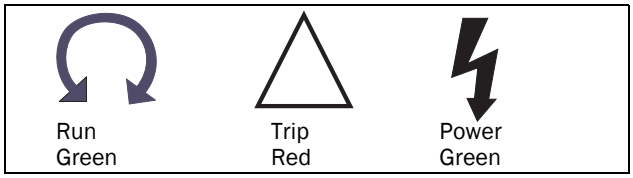

Fig. 100 LED indications

Table 32 LED indication

Symbol	Function		
	ON	FLASHING	OFF
POWER (green)	Power on	----------	Power off
TRIP (red)	AC drive tripped	Warning/Limit	No warning or trip
RUN (green)	Motor shaft rotates	Motor speed increase/ decrease	Motor stopped

10.3.4 Control keys

The control keys are used to give the Run, Stop or Reset commands directly. As default these keys are disabled, set for remote control. Activate the control keys by selecting Keyboard in the menus "Ref Control [214]", "Run/Stop Control [215]" and "Reset Ctrl [216]".

If the Enable function is programmed on one of the digital inputs, this input must be active to allow Run/Stop commands from the control panel.

Table 33 Control keys

	RUN L:	gives a start with left rotation
RESET	STOP/RESET:	stops the motor or resets the AC drive after a trip
	RUN R:	gives a start with right rotation

NOTE: It is not possible to simultaneously activate the Run/Stop commands from the keyboard and remotely from the terminal strip (terminals 1-22). Exception is the JOG-function which can give start command, see " Jog Speed [348]" on page 155.

10.3.5 The Toggle and Loc/Rem Key

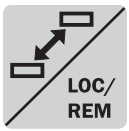

This key has two functions: Toggle and switching between Loc/Rem function.

Press one second to use the toggle function

Press and hold the toggle key for more than five seconds to switch between Local and Remote function, depending on the settings in [2171] and [2172].

When editing values, the toggle key can be used to change the sign of the value, see section 10.6, page 96.

Toggle function

Using the toggle function makes it possible to easily step through selected menus in a loop. The toggle loop can contain a maximum of ten menus. As default the toggle loop contains the menus needed for Quick Setup. You can use the toggle loop to create a quick-menu for the parameters that are most importance to your specific application.

NOTE: Do not keep the Toggle key pressed for more than five seconds without pressing either the +, - or Esc key, as this may activate the Loc/Rem function of this key instead. See menu [217].

Add a menu to the toggle loop

1. Go to the menu you want to add to the loop.
2. Press the Toggle key and keep it pressed while pressing the + key.

Delete a menu from the toggle loop

1. Go to the menu you want to delete using the toggle key.
2. Press the Toggle key and keep it pressed while pressing the - key.

Delete all menus from the toggle loop

1. Press the Toggle key and keep it pressed while pressing the Esc key.
2. Confirm with Enter.

Default toggle loop

Fig. 93 shows the default toggle loop. This loop contains the necessary menus that need to be set before starting. Press Toggle to enter menu [211] then use the Next key to enter the sub menus [212] to [21A] and enter the parameters. When you press the Toggle key again, menu [221] is displayed.

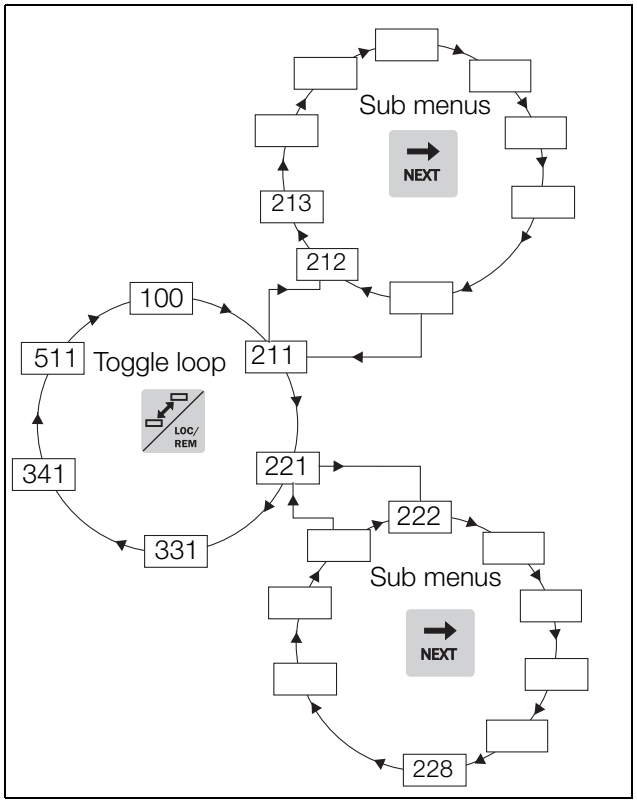

Fig. 101 Toggle loop example.

Indication of menus in toggle loop

Menus included in the toggle loop are indicated with a ▪ in area B in the display.

Loc/Rem function

The Loc/Rem function of this key is disabled as default. Enable the function in menu [2171] and/or [2172].

With the function Loc/Rem you can change between local and remote control of the AC drive from the control panel. The function Loc/Rem can also be changed via the DigIn, see menu “Digital inputs [520]”.

Change control mode

1. Press the Loc/Rem key for five seconds, until Local? or Remote? is displayed.
2. Confirm with Enter.
3. Cancel with Esc.

Local mode

Local mode is used for temporary operation. When switched to LOCAL operation, the AC drive is controlled via the defined Local operation mode, i.e. [2171] and [2172]. The actual status of the AC drive will not change, e.g. Run/Stop conditions and the actual speed will remain exactly the same. When the AC drive is set to Local operation, the display will show L in area B in the display.

Remote mode

When the AC drive is switched to REMOTE operation, the AC drive will be controlled according to selected control methods in the menu's "Reference Control [214]", "Run/ Stop Control [215]" and "Reset Control [216]".
To monitor the actual Local or Remote status of the AC drive control, a "Loc/Rem" signal is available on the Digital Outputs or Relays. When the AC drive is set to Local, the signal on the DigOut or Relay will be active/high, in Remote the signal will be inactive/low. See menu "Digital Outputs [540]" and "Relays [550]".

10.3.6 Function keys

The function keys operate the menus and are also used for programming and read-outs of all the menu settings.

Table 34 Function keys

ENTER	ENTER key:	- step to a lower menu level - confirm a changed setting
ESC	ESCAPE key:	- step to a higher menu level - ignore a changed setting, without confirming
PREV	PREVIOUS key:	- step to a previous menu within the same level - go to more significant digit in edit mode
NEXT	NEXT key:	- step to a next menu within the same level - go to less significant digit in edit mode
−	- key:	- decrease a value - change a selection
+	+ key:	- increase a value - change a selection
LOC/ REM	TOGGLE and LOC/REM key:	- Toggle between menus in the toggle loop - Switching between local and remote control - Change the sign of a value

10.4 The menu structure

The menu structure consists of 4 levels:

Main Menu 1st level	The first character in the menu number.
2nd level	The second character in the menu number.
3rd level	The third character in the menu number.
4th level	The fourth character in the menu number.

This structure is consequently independent of the number of menus per level.

For instance, a menu can have one selectable menu (Set/ View Reference Value [310]), or it can have 17 selectable menus (menu Speeds [340]).

NOTE: If there are more than 10 menus within one level, the numbering continues in alphabetic order.

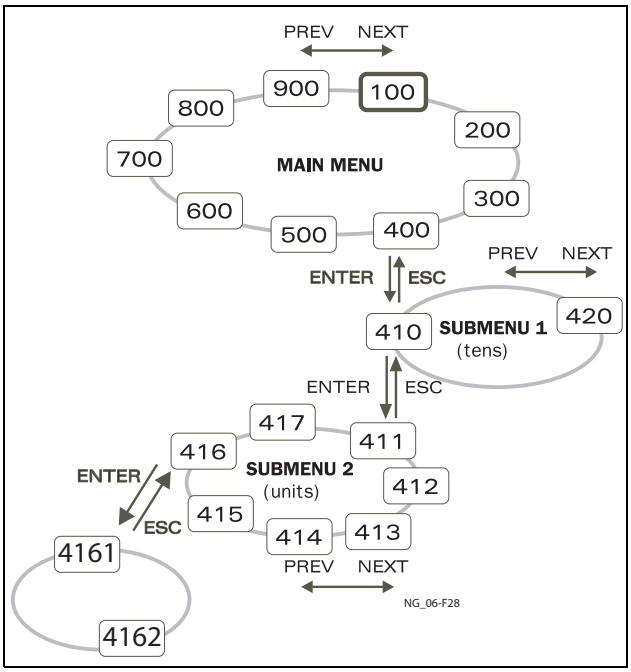

Fig. 102 Menu structure

10.4.1 The main menu

This section gives you a short description of the functions in the Main Menu.

100 Start Window

Displayed at power-up. It displays the actual process value as default. Programmable for many other read-outs.

200 Main Setup

Main settings to get the AC drive operable. The motor data settings are the most important. Also option utility and settings.

300 Process and Application Parameters

Settings more relevant to the application such as Reference Speed, torque limitations, PID control settings, etc.

400 Load Monitor and Process Protection

The monitor function enables the AC drive to be used as a load monitor to protect machines and processes against mechanical overload and underload.

500 Inputs/Outputs and Virtual Connections

All settings for inputs and outputs are entered here.

600 Logical Functions and Timers

All settings for conditional signals are entered here.

700 View Operation and Status

Viewing all the operational data like frequency, load, power, current, etc.

800 View Trip Log

Viewing the last 10 trips in the trip memory.

900 System Data

Electronic type label for viewing the software version and AC drive type.

10.5 Programming during operation

Most of the parameters can be changed during operation without stopping the AC drive. Parameters that can not be changed are marked with a lock symbol in the display.

NOTE: If you try to change a function during operation that only can be changed when the motor is stopped, the message "Stop First" is displayed.

10.6 Editing values in a menu

Most values in the third row in a menu can be changed in two different ways. Enumerated values like the baud rate can only be changed with alternative 1.

Alternative 1

When you press the + or - keys to change a value, the cursor is flashing to the left in the display and the value is increased or decreased when you press the appropriate key. If you keep the + or - keys pressed, the value will increase or decrease continuously. When you keep the key pressed the change speed will increase. The Toggle key is used to change the sign of the entered value. The sign of the value will also change when zero is passed. Press Enter to confirm the value.

Alternative 2

Press the + or - key to enter edit mode. Then press the Prev or Next key to move the cursor to the right most position of the value that should be changed. The cursor will make the selected character flashes. Move the cursor using the Prev or Next keys. When you press the + or - keys, the character at the cursor position will increase or decrease. This alternative is suitable when you want to make large changes, i.e. from 2 s to 400 s.

To change the sign of the value, press the toggle key. This makes it possible to enter negative values (Only valid for certain parameters).

Example: When you press Next the 4 will flash.

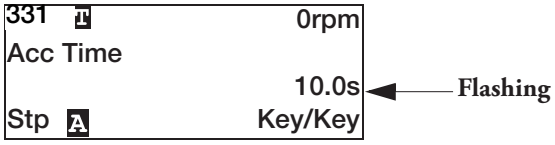

Press Enter to save the setting and Esc to leave the edit mode.

10.7 Copy current parameter to all sets

When a parameter is displayed, press the Enter key for 5 seconds. Now the text To all sets? is displayed. Press Enter to copy the setting for current parameter to all sets.

10.8 Programming example

This example shows how to program a change of the Acc. Time set from 2.0 s to 4.0 s.

The flashing cursor indicates that a change has taken place but is not saved yet. If at this moment, the power fails, the change will not be saved.

Use the ESC, Prev, Next or the Toggle keys to proceed and to go to other menus.

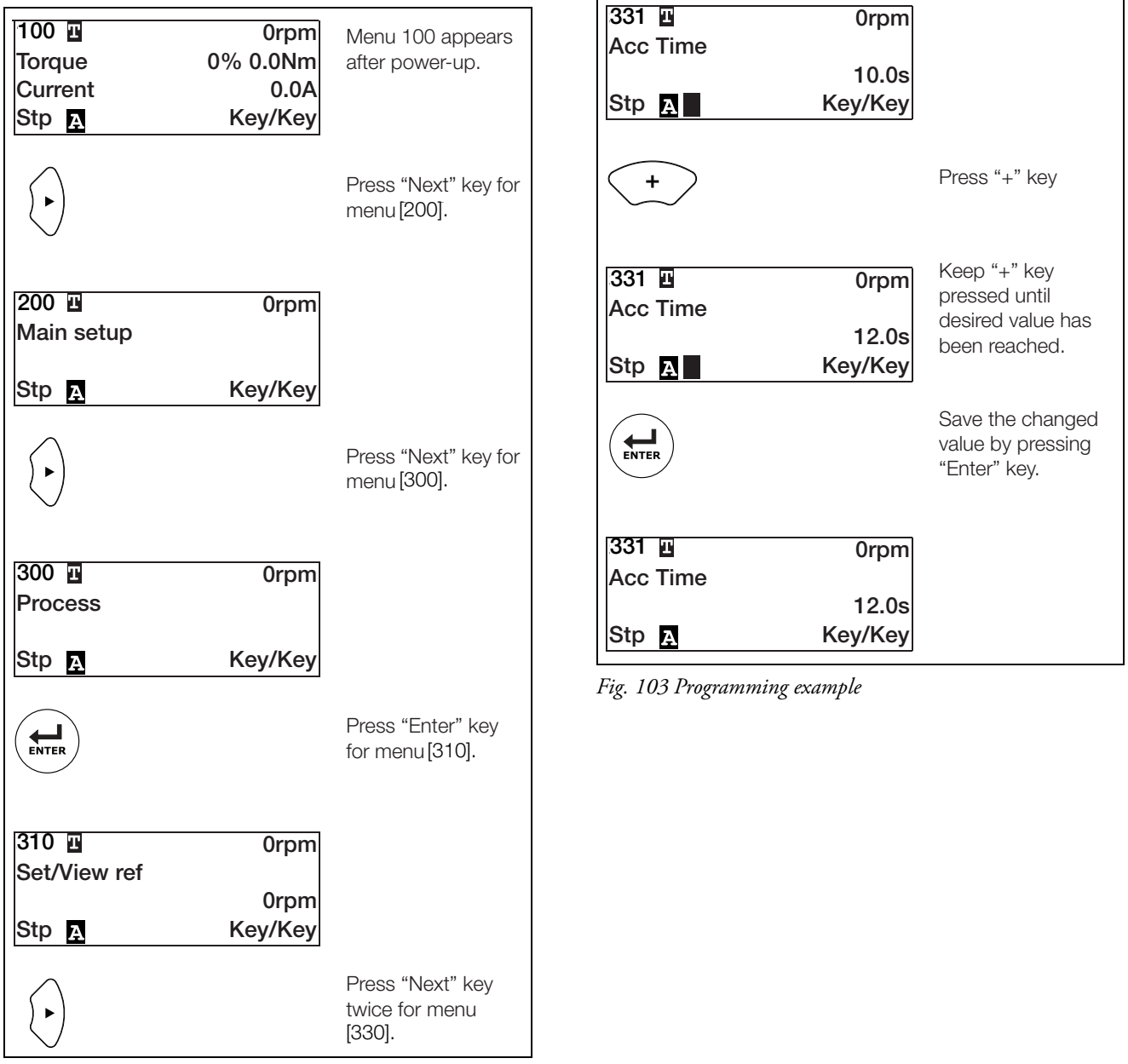

Fig. 103 Programming example

11. Functional Description

This chapter describes the menus and parameters in the software. It also briefly describes how menus and parameters are shown in the LCD windows in the two different Control panels that are available for Omron AC drives versions IP54 and IP20/21.

There are two models of Control panels available with different LCD displays and layout.

2-line display

4-line display

11.1 2-line LCD display

See chapter “10.3 Control panel with 2-line display” on page 92 for detailed information.

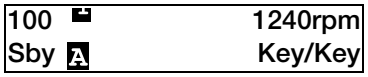

Preferred View [100]

This menu is displayed at every power-up. During operation, the menu [100] will automatically be displayed when the keyboard is not operated for 5 minutes. The automatic return function will be switched off when the Toggle and Stop key is pressed simultaneously. As default it displays the reference and current values.

Menu “[100] Preferred View” displays the settings made in menu “[110], 1st line”, and “[120], 2nd line”. See Fig. 104.

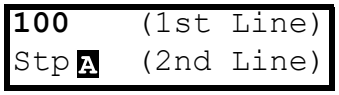

Fig. 104 Display functions

11.2 4-line LCD display

See chapter “10.2 Control panel with 4-line display” on page 87 for detailed information

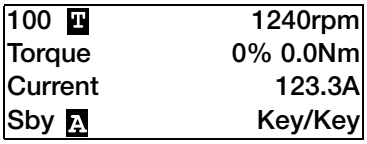

Menu [100] Preferred view

This menu is displayed at every power-up. During operation, the menu [100] will automatically be displayed when the keyboard is not operated for 5 minutes.

Menu “[100] Preferred View” displays the settings made in menu “[110], 1st line”, “[120], 2nd line” and “[130], 3rd line”.

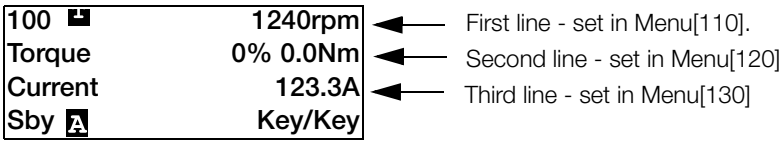

Extended signal monitoring

If you hold the ESC key when in menu [100] following window will appear, as long as the key is pressed.
Here First, Second and Third line are shown as selected in menu [100].
Then additional information will be displayed, selected in the menus [140], [150] and [160] according to below.

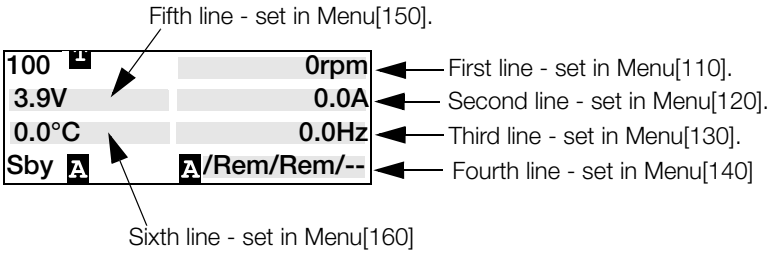

Use menu “[170] View mode” to select active type of menu [100] presentation, select if “Normal 100” or “Always 100+” Extended signal monitoring” shall be shown at power-up. A third choice is menu “Normal 100wo” = menu [100] without explaining text at second and third line.

11.3 Menus

Following chapters describes the menus and parameters in the software. You will find a short description of each function and information about default values, ranges, etc. There are also tables containing communication information. You will find the parameter number for all available fieldbus options as well as the enumeration for the data.
On our home page in the download area, you could find a "Communication information" list and a list to note "Parameter set" information.

NOTE: Functions marked with the sign 🔒 cannot be changed during Run Mode.

Description of menu table layout

Following two kinds of tables are used in this chapter.

332 Read only ② 🔒 ①		Dec Time ③
Default:		④
⑤	⑥	⑦

222 Read-only ② 🔒 ①	Motor Frequ ③
Default:	50% ④
Resolution	⑦

1. Parameter cannot be changed during operation.
2. Parameter only for viewing.
3. Menu information as displayed on control panel. For explanation of display text and symbols, see Chapter 10. page 87.
4. Factory setting of parameter (also showed on display).
5. Available settings for the menu, listed selections.
6. Communication integer value for the selection. For use with communication bus interface (only if selection type parameters).
7. Description of selection alternative, setting or range (min - max value).

Resolution of settings

The resolution for all range settings described in this chapter is 3 significant digits. Exceptions are speed values which are presented with 4 significant digits. Table 35 shows the resolutions for 3 significant digits.

Table 35

3 Digit	Resolution
0.01-9.99	0.01
10.0-99.9	0.1
100-999	1
1000-9990	10
10000-99900	100

11.3.1 1st Line [110]

Sets the content of the first line in the menu "[100] Start Window."

110		1st Line
Default:		Process Val
Dependent on menu		
Process Val	0	Process value
Speed	1	Speed
Torque	2	Torque
Process Ref	3	Process reference
Shaft Power	4	Shaft power
El Power	5	Electrical power
Current	6	Current
Output volt	7	Output voltage
Frequency	8	Frequency
DC Voltage	9	DC voltage
IGBT Temp	10	IGBT temperature
Motor Temp[1]	11	Motor temperature
VSD Status	12	AC drive status
Run Time	13	Run Time
Energy	14	Energy
Mains Time	15	Mains time
Enc Speed[2]	16	Encoder speed

1) The "Motor temp" is only visible if you have the option PTC/PT100 card installed and a PT100 input is selected in menu[236].
2) Can only be selected if Encoder option board is installed.

Communication information

Modbus Instance no/DeviceNet no:	43001
Profibus slot/index	168/160
EtherCAT and CANopen index (hex)	4bb9
Profinet IO index	19385
Fieldbus format	UInt
Modbus format	UInt

11.3.2 2nd Line [120]

Sets the content of the second line in the menu "[100] Start Window". Same selection as in menu [110].

120	2nd Line
Default:	Current

Communication information

Modbus Instance no/DeviceNet no:	43002
Profibus slot/index	168/161
EtherCAT and CANopen index (hex)	4bba
Profinet IO index	19386
Fieldbus format	UInt
Modbus format	UInt

NOTE: Following menus [130] to [170] are only valid for the control panel with 4-line display.

11.3.3 3rd Line [130]

Sets the content of the third line in the menu "[100] Start Window". Same selection as in menu [110].

130	3rd Line
Default:	Frequency

Communication information

Modbus Instance no/DeviceNet no:	43003
Profibus slot/index	168/162
EtherCAT and CANopen index (hex)	4bbb
Profinet IO index	19387
Fieldbus format	
Modbus format	

11.3.4 4th Line [140]

Sets the content of the fourth line in the menu "[100] Start Window". Same selection as in menu [110].

140	4th Line
Default:	VSD Status

Communication information

Modbus Instance no/DeviceNet no:	43004
Profibus slot/index	168/163
EtherCAT and CANopen index (hex)	4bbc
Profinet IO index	19388
Fieldbus format	
Modbus format	

11.3.5 5th Line [150]

Sets the content of the fifth line in the menu "[100] Start Window". Same selection as in menu [110].

150	5th Line
Default:	DC Voltage

Communication information

Modbus Instance no/DeviceNet no:	43005
Profibus slot/index	168/164
EtherCAT and CANopen index (hex)	4bbd
Profinet IO index	19389
Fieldbus format	
Modbus format	

11.3.6 6th Line [160]

Sets the content of the sixth line in the menu "[100] Start Window". Same selection as in menu [110].

160	6th Line
Default:	IGBT Temp

Communication information

Modbus Instance no/DeviceNet no:	43006
Profibus slot/index	168/165
EtherCAT and CANopen index (hex)	4bbe
Profinet IO index	19390
Fieldbus format	
Modbus format	

11.3.7 View mode [170]

Select how menu [100] shall be displayed.

170	View mode
Default:	Normal 100
Normal 100	Preferred view as set in menu 110, 120, 130
Normal 100wo	As Normal 100 without text at second and third lines.
Always 100+	Extended signal monitoring as set in menus 110 - 160

Communication information

Modbus Instance no/DeviceNet no:	43007
Profibus slot/index	168/166
EtherCAT and CANopen index (hex)	4bbf
Profinet IO index	19391
Fieldbus format	
Modbus format	

11.4 Main Setup [200]

The Main Setup menu contains the most important settings to get the AC drive operational and set up for the application. It includes different sub menus concerning the control of the unit, motor data and protection, utilities and automatic resetting of faults. This menu will instantaneously be adapted to build in options and show the required settings.

11.4.1 Operation [210]

Selections concerning the used motor, AC drive mode, control signals and serial communication are described in this submenu and is used to set the AC drive up for the application.

Language [211]

Select the language used on the LC Display. Once the language is set, this selection will not be affected by the Load Default command.
There are two software sets with different languages available for delivery. “Standard software, Language set 1” and the optional “Standard software, Language set 2”, see table below and Fig. 1, page 9.

211		Language	Language set	
Default:		English	Set 1	Set 2
English	0	English selected	X	X
Svenska	1	Swedish selected	X	-
Nederlands	2	Dutch selected	X	-
Deutsch	3	German selected	X	X
Français	4	French selected	-	X
Español	5	Spanish selected	X	-
Русский	6	Russian selected	X	X
Italiano	7	Italian selected	X	-
Česky	8	Czech selected	-	X
Turkish	9	Turkish selected	-	X
-	10	-	-	
Polski	11	Polish selected		X

Communication information

Modbus Instance no/DeviceNet no:	43011
Profibus slot/index	168/170
EtherCAT and CANopen index (hex)	4bc3
Profinet IO index	19395
Fieldbus format	UInt
Modbus format	UInt

Select Motor [212]

This menu is used if you have more than one motor in your application. Select the motor to define. It is possible to define up to four different motors, M1 to M4, in the AC drive. For parameter set handling including Motor sets M1 - M4 see Chapter 11.4.6 page 122.

212	Select Motor	
Default:		M1
M1	0	Motor Data is connected to selected motor.

212	Select Motor	
Default:		M1
M1	0	Motor Data is connected to selected motor.
M2	1	
M3	2	
M4	3	

Communication information

Modbus Instance no/DeviceNet no:	43012
Profibus slot/index	168/171
EtherCAT and CANopen index (hex)	4bc4
Profinet IO index	19396
Fieldbus format	UInt
Modbus format	UInt

Drive Mode [213]

This menu is used to set the control mode for the motor. Settings for the reference signals and read-outs is made in menu “Process source, [321]”.

- V/Hz Mode (output speed [712] in rpm)

213	Drive Mode	
Default:		V/Hz
V/Hz	2	All control loops are related to frequency control. In this mode multi-motor applications are possible. **NOTE: All the functions and menu read-outs with regard to speed and rpm (e.g. Max Speed = 1500 rpm, Min Speed=0 rpm, etc.) remain speed and rpm, although they represent the output frequency.**

Communication information

Modbus Instance no/DeviceNet no:	43013
Profibus slot/index	168/172
EtherCAT and CANopen index (hex)	4bc5
Profinet IO index	19397
Fieldbus format	UInt
Modbus format	UInt

Reference control [214]

To control the speed of the motor, the AC drive needs a reference signal. This reference signal can be controlled by a remote source from the installation, the keyboard of the AC drive, or via communication (RS-485, Fieldbus, or Wireless interfaces). Select the required reference control for the application in this menu.

214		Ref control
Default:		Remote
Remote	0	The reference signal comes from the analogue inputs of the terminal strip (terminals 1-22).
Keyboard	1	Reference is set with the + and - keys on the Control Panel. Can only be done in menu “Set/View reference [310]”.
Com	2	The reference is set via the serial communication (RS 485, Fieldbus or Wireless interfaces). See section 9.5, page 84 for further information.
Option	3	The reference is set via an option. Only available if the option can control the reference value.

NOTE: If the reference is switched from Remote to Keyboard, the last remote reference value will be the default value for the control panel.

Communication information

Modbus Instance no/DeviceNet no:	43014
Profibus slot/index	168/173
EtherCAT and CANopen index (hex)	4bc6
Profinet IO index	19398
Fieldbus format	UInt
Modbus format	UInt

Run/Stop Control [215]

This function is used to select the source for run and stop commands. This is described on page 152.

Start/stop via analogue signals can be achieved by using function “Stp<MinSpd [342]”.

215		Run/Stp Ctrl
Default:		Remote
Remote	0	The start/stop signal comes from the digital inputs of the terminal strip (terminals 1-22). For settings, see menu group [330] and [520].
Keyboard	1	Start and stop is set on the Control Panel.
Com	2	The start/stop is set via communication, i.e. via RS-485, Fieldbus, or wireless interface. See Fieldbus or RS-232/485 option manual for details and chapter 9.4 Start and stop commands page 72.
Option	3	The start/stop is set via an option.

Communication information

Modbus Instance no/DeviceNet no:	43015
Profibus slot/index	168/174
EtherCAT and CANopen index (hex)	4bc7
Profinet IO index	19399
Fieldbus format	UInt
Modbus format	UInt

NOTE: If the reference is switched from Remote to Keyboard, the last remote reference value will be the default value for the control panel.

NOTE: Drive should be stopped in case configured source of reference or run/stop control is lost, e.g. due to communication errors. Hence, it is highly recommended to use the available mechanisms to monitor the communication between the AC drive and the controlling equipment. See the following menus for more information: Keyboard [2645] and [2646] Communication: RS-485 [262], Fieldbus [263], Wireless [270]

Reset Control [216]

When the AC drive is stopped due to a failure, a reset command is required to make it possible to restart the AC drive. Use this function to select the source of the reset signal.

216		Reset Ctrl
Default:		Remote
Remote	0	The command comes from the inputs of the terminal strip (terminals 1-22).
Keyboard	1	The command comes from the command keys of the Control Panel.
Com	2	The command comes from the communication (RS 485, Fieldbus).
Remote + Keyb	3	The command comes from the inputs of the terminal strip (terminals 1-22) or the keyboard.
Com + Keyb	4	The command comes from the communication (RS485, Fieldbus) or the keyboard.
Rem+Keyb +Com	5	The command comes from the inputs of the terminal strip (terminals 1-22), the keyboard or the communication (RS485, Fieldbus).
Option	6	The command comes from an option. Only available if the option can control the reset command.

Communication information

Modbus Instance no/DeviceNet no:	43016
Profibus slot/index	168/175
EtherCAT and CANopen index (hex)	4bc8
Profinet IO index	19400
Fieldbus format	UInt
Modbus format	UInt

Local/Remote key function [217]

The Toggle key on the keyboard, see section 10.2.8, page 91, has two functions and is activated in this menu. As default the key is just set to operate as a Toggle key that moves you easily through the menus in the toggle loop. The second function of the key allows you to easily swap between Local and normal operation (set up via [214] and [215]) of the AC drive. Local mode can also be activated via a digital input. If both [2171] and [2172] is set to Standard, the function is disabled.

2171		LocRefCtrl
Default:		Standard
Standard	0	Local reference control set via [214]
Remote	1	Local reference control via remote
Keyboard	2	Local reference control via keyboard
Com	3	Local reference control via communication

Communication information

Modbus Instance no/DeviceNet no:	43009
Profibus slot/index	168/168
EtherCAT and CANopen index (hex)	4bc1
Profinet IO index	19393
Fieldbus format	UInt
Modbus format	UInt

2172		LocRunCtrl
Default:		Standard
Standard	0	Local Run/Stop control set via [215]
Remote	1	Local Run/Stop control via remote
Keyboard	2	Local Run/Stop control via keyboard
Com	3	Local Run/Stop control via communication

Communication information

Modbus Instance no/DeviceNet no:	43010
Profibus slot/index	168/169
EtherCAT and CANopen index (hex)	4bc2
Profinet IO index	19394
Fieldbus format	UInt
Modbus format	UInt

Lock Code? [218]

To prevent the keyboard being used or to change the setup of the AC drive and/or process control, the keyboard can be locked with a password. This menu, “Lock Code [218]”, is used to lock and unlock the keyboard. Enter the password “291” to lock/unlock the keyboard operation. If the keyboard is not locked (default) the selection “Lock Code?” will appear. If the keyboard is already locked, the selection “Unlock Code?” will appear.

When the keyboard is locked, parameters can be viewed but not changed. The reference value can be changed and the AC drive can be started, stopped and reversed if these functions are set to be controlled from the keyboard.

218	Lock code?
Default:	0
Range:	0–9999

Communication information

Modbus Instance no/DeviceNet no:	43018
Profibus slot/index	168/177
EtherCAT and CANopen index (hex)	4bca
Profinet IO index	19402
Fieldbus format	UInt, 1=1
Modbus format	UInt

Rotation [219]

Overall limitation of motor rotation direction

This function limits the overall rotation, either to left or right or both directions. This limit is prior to all other selections, e.g.: if the rotation is limited to right, a Run-Left command will be ignored. To define left and right rotation we assume that the motor is connected U-U, V-V and W-W.

Speed Direction and Rotation

The speed direction can be controlled by:

- RunR/RunL commands on the control panel.
- RunR/RunL commands on the terminal strip (terminals 1-22).
- Via the serial interface options.
- The parameter sets.

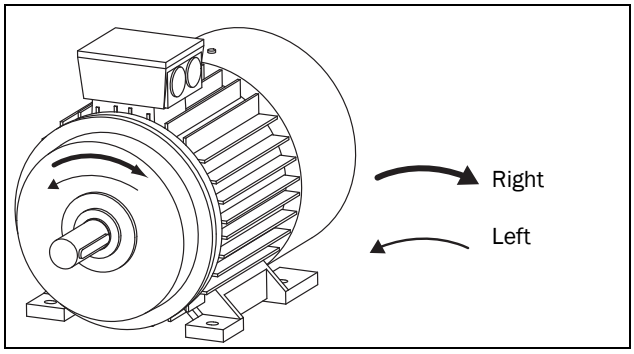

Fig. 105 Rotation

In this menu you set the general rotation for the motor.

219	Rotation	
Default:		R + L
R	1	Speed direction is limited to right rotation. The input and key RunL are disabled.
L	2	Speed direction is limited to left rotation. The input and key RunR are disabled.
R+L	3	Both speed directions allowed.

Communication information

Modbus Instance no/DeviceNet no:	43019
Profibus slot/index	168/178
EtherCAT and CANopen index (hex)	4bcb
Profinet IO index	19403
Fieldbus format	UInt
Modbus format	UInt

11.4.2 Remote Signal Level/Edge [21A]

In this menu you select the way to control the inputs for RunR, RunL and Reset that are operated via the digital inputs on the terminal strip. The inputs are default set for level-control, and will be active as long as the input is made and kept high. When edge-control is selected, the input will be activated by the low to high transition of the input. See Chapter 7.2 page 64 for more information.

21A		Level/Edge
Default:		Level
Level	0	The inputs are activated or deactivated by a continuous high or low signal. Is commonly used if, for example, a PLC is used to operate the AC drive.
Edge	1	The inputs are activated by a transition; for Run and Reset from “low” to “high” and for Stop from "high" to "low".

Communication information

Modbus Instance no/DeviceNet no:	43020
Profibus slot/index	168/179
EtherCAT and CANopen index (hex)	4bcc
Profinet IO index	19404
Fieldbus format	UInt
Modbus format	UInt

CAUTION!
Level controlled inputs DO NOT comply with the Machine Directive if the inputs are directly used to start and stop the machine.

NOTE: Edge controlled inputs can comply with the Machine Directive (see the Chapter 8. page 77) if the inputs are directly used to start and stop the machine.

11.4.3 Mains supply voltage [21B]

WARNING!
This menu must be set according to the AC drive product label and the supply voltage used. Wrong setting might damage the AC drive or brake resistor.

In this menu the nominal mains supply voltage connected to the AC drive can be selected. The setting will be valid for all parameter sets. The default setting, Not defined, is never selectable and is only visible until a new value is selected.

This menu specifies the AC supply voltage. The corresponding DC voltage is 1.34 times higher.

Once the supply voltage is set, this selection will not be affected by the Load Default command [243].

Brake chopper activation level is adjusted using the setting of [21B].

NOTE: The setting is affected by the “Load from CP” command [245] and if loading parameter file via EmoSoftCom.

21B		Supply Volts
Default:		Not defined
Not Defined	0	Inverter default value used. Only valid if this parameter is never set.
220-240 VAC	1	Only valid for SX-V48
380-415 VAC	3	Only valid for SX-V48/69
440-480 VAC	4	Only valid for SX-V48/69
500-525 VAC	5	Only valid for SX-V69
550-600 VAC	6	Only valid for SX-V69
660-690 VAC	7	Only valid for SX-V69

Communication information

Modbus Instance no/DeviceNet no:	43381
Profibus slot/index	170/30
EtherCAT and CANopen index (hex)	4d35
Profinet IO index	19765
Fieldbus format	UInt
Modbus format	UInt

Supply Type [21C]

Set supply voltage type.

21C		Supply Type
Default:		AC Supply
AC Supply	0	Normal AC supply
AFE Supply	1	DC supply voltage by AFE
DC Supply	2	DC supply voltage
AC/DC Suppl	3	AC/DC supply voltage

Communication information

Modbus Instance no/DeviceNet no:	43382
Profibus slot/index	170/31
EtherCAT and CANopen index (hex)	4d36
Profinet IO index	19766
Fieldbus format	UInt
Modbus format	UInt

When changing to / from the "AFE Supply" selection, the following parameters are set to following values:

Menu	to AFE	from AFE
[523] DigIn 3	Sleep	Off
[542] DigOut 3	Run	Brake
[527] DigIn 7	Off	Off
[561] VIO 1 Dest	External Trip	Off
[562] VIO 1 Source	!D1	Off
[6151] CD 1	DigIn 7	Run

11.4.4 Motor Data [220]

In this menu you enter the motor data to adapt the AC drive to the connected motor. This is crucial for the control accuracy as well as different read-outs and analogue output signals.

Motor M1 is selected as default and motor data entered will be valid for motor M1. If you have more than one motor you need to select the correct motor in menu [212] before entering motor data.

NOTE 1: The parameters for motor data cannot be changed during run mode.

NOTE 2: The default settings are for a standard 4-pole motor according to the nominal power of the AC drive.

NOTE 3: Parameter set cannot be changed during run if the parameter set is set for different motors.

NOTE 4: Motor Data in the different sets M1 to M4 can be revert to default setting in menu "[243] Default>Set".

WARNING!
Enter the correct motor data to prevent dangerous situations and assure correct control.

Motor Voltage [221]

Set the nominal motor voltage.

221	Motor Volts
Default:	400 V for SX-_4 690 V for SX-_6
Range:	100-700 V
Resolution	1 V

NOTE: The Motor Volts value will always be stored as a 3 digit value with a resolution of 1 V.

Communication information

Modbus Instance no/DeviceNet no:	43041
Profibus slot/index	168/200
EtherCAT and CANopen index (hex)	4be1
Profinet IO index	19425
Fieldbus format	Long, 1=0.1 V
Modbus format	EInt

Motor Frequency [222]

Set the nominal motor frequency.

222 Motor Freq	
Default:	50 Hz
Range:	20.0 - 599.0 Hz
Resolution	0.1 Hz

Communication information

Modbus Instance no/DeviceNet no:	43060 = 0.1	43042 = 1
Profibus slot/index	168/219	168/201
EtherCAT and CANopen index (hex)	4bf4	4be2
Profinet IO index	19444	19426
Fieldbus format	Long, 1=0.1 Hz	Long, 1=1 Hz
Modbus format	EInt	EInt

Motor Power [223]

Set the nominal motor power. If parallel motors, set the value as sum of motors power. The nominal motorpower must be within the range of 1 - 150% of the AC drives nominal power.

223 Motor Power	
Default:	(P_{NOM}) kW, AC drive
Range:	1-150 % x P_{NOM}
Resolution	3 significant digits

NOTE: The Motor Power value will always be stored as a 3 digit value in W up to 999 W and in kW for all higher powers.

Communication information

Modbus Instance no/DeviceNet no:	43043
Profibus slot/index	168/202
EtherCAT and CANopen index (hex)	4be3
Profinet IO index	19427
Fieldbus format	Long, 1=1 W
Modbus format	EInt

P_{NOM} is the nominal AC drive power.

Motor Current [224]

Set the nominal motor current. If parallel motors, set the value as sum of motors current.

224 Motor Curr	
Default:	(I_{MOT}) A (see Note 2 page 109)
Range:	25 - 150 % x I_{NOM} A

Communication information

Modbus Instance no/DeviceNet no:	43044
Profibus slot/index	168/203
EtherCAT and CANopen index (hex)	4be4
Profinet IO index	19428
Fieldbus format	Long, 1=0.1 A
Modbus format	EInt

NOTE: The default settings are for a standard 4-pole motor according to the nominal power of the AC drive.

Motor Speed [225]

Set the nominal asynchronous motor speed.

225	Motor Speed
Default:	(n_{MOT}) rpm (see Note 2 page 109)
Range:	30 - 35940 rpm
Resolution	1 rpm, 4 sign digits

WARNING!
Do NOT enter a synchronous (no-load) motor speed.

NOTE: Maximum speed [343] is not automatically changed when the motor speed is changed.

NOTE: Entering a wrong, too low value can cause a dangerous situation for the driven application due to high speeds.

Communication information

Modbus Instance no/DeviceNet no:	43045
Profibus slot/index	168/204
EtherCAT and CANopen index (hex)	4be5
Profinet IO index	19429
Fieldbus format	UInt. 1=1 rpm
Modbus format	UInt

Motor Poles [226]

When the nominal speed of the motor is ≤500 rpm, the additional menu for entering the number of poles, [226], appears automatically. In this menu the actual pole number can be set which will increase the control accuracy of the AC drive.

226	Motor Poles
Default:	4
Range:	2-144

Communication information

Modbus Instance no/DeviceNet no:	43046
Profibus slot/index	168/205
EtherCAT and CANopen index (hex)	4be6
Profinet IO index	19430
Fieldbus format	Long, 1=1 pole
Modbus format	EInt

Motor Cos φ [227]

Set the nominal Motor cosphi (power factor).

227	Motor Cosφ
Default:	$Cos\varphi_{NOM}$ (see Note 2 page 109)
Range:	0.45 - 1.00

Communication information

Modbus Instance no/DeviceNet no:	43047
Profibus slot/index	168/206
EtherCAT and CANopen index (hex)	4be7
Profinet IO index	19431
Fieldbus format	Long, 1=0.01
Modbus format	EInt

Motor ventilation [228]

Parameter for setting the type of motor ventilation. Affects the characteristics of the I^2t motor protection by lowering the actual overload current at lower speeds.

228	Motor Vent	
Default:		Self
None	0	Limited I^2t overload curve.
Self	1	Normal I^2t overload curve. Means that the motor stands lower current at low speed.
Forced	2	Expanded I^2t overload curve. Means that the motor stands almost the whole current also at lower speed.

Communication information

Modbus Instance no/DeviceNet no:	43048
Profibus slot/index	168/207
EtherCAT and CANopen index (hex)	4be8
Profinet IO index	19432
Fieldbus format	UInt
Modbus format	UInt

When the motor has no cooling fan, None is selected and the current level is limited to 55% of rated motor current.

With a motor with a shaft mounted fan, Self is selected and the current for overload is limited to 87% from 20% of synchronous speed. At lower speed, the overload current allowed will be smaller.

When the motor has an external cooling fan, Forced is selected and the overload current allowed starts at 90% from rated motor current at zero speed, up to nominal motor current at 70% of synchronous speed.

Fig. 106 shows the characteristics with respect for Nominal Current and Speed in relation to the motor ventilation type selected.

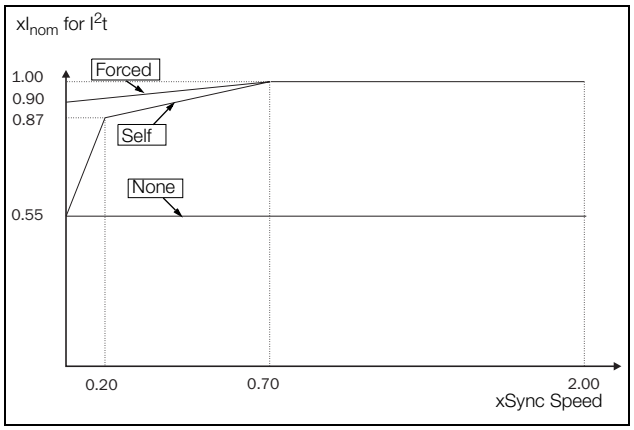

Fig. 106 I^2t curves

Motor Identification Run [229]

This function is used when the AC drive is put into operation for the first time. To achieve an optimal control performance, fine tuning of the motor parameters using a motor ID run is needed. During the test run the display shows "Test Run" flashing.

To activate the Motor ID run, select "Short" and press Enter. Then press RunL or RunR on the control panel to start the ID run. If menu "[219] Rotation" is set to L the RunR key is inactive and vice versa. The ID run can be aborted by giving a Stop command via the control panel or Enable input. The parameter will automatically return to OFF when the test is completed. The message "Test Run OK!" is displayed. Before the AC drive can be operated normally again, press the STOP/RESET key on the control panel.

During the Short ID run the motor shaft does not rotate. The AC drive measures the rotor and stator resistance.

229		Motor ID-Run
Default:		Off, see Note
Off	0	Not active
Short	1	Parameters are measured with injected DC current. No rotation of the shaft will occur.

Communication information

Modbus Instance no/DeviceNet no:	43049
Profibus slot/index	168/208
EtherCAT and CANopen index (hex)	4be9
Profinet IO index	19433
Fieldbus format	UInt
Modbus format	UInt

NOTE: To run the AC drive it is not mandatory for the ID RUN to be executed, but without it the performance will not be optimal.

NOTE: If the ID Run is aborted or not completed the message "Interrupted!" will be displayed. The previous data do not need to be changed in this case. Check that the motor data are correct.

Motor Sound [22A]

Sets the sound characteristic of the AC drive output stage by changing the switching frequency and/or pattern. Generally the motor noise will go down at higher switching frequencies.

22A		Motor Sound
Default:		F ("Advanced" for models 48-293/295 and 48-365)
E	0	Switching frequency 1.5 kHz
F	1	Switching frequency 3 kHz
G	2	Switching frequency 6 kHz
H	3	Switching frequency 6 kHz, random frequency (±750 Hz)
Advanced	4	Switching frequency and PWM mode setup via [22E]

Communication information

Modbus Instance no/DeviceNet no:	43050
Profibus slot/index	168/209
EtherCAT and CANopen index (hex)	4bea
Profinet IO index	19434
Fieldbus format	UInt
Modbus format	UInt

NOTE: At switching frequencies >3 kHz derating may become necessary.

NOTE: If the heat sink temperature gets too high the switching frequency is decreased to avoid tripping. This is done automatically in the AC drive. The default switching frequency is 3 kHz.

Encoder Feedback [22B]

Only visible if the Encoder option board is installed. This parameter enables or disables the encoder feedback from the motor to the AC drive.

22B		Encoder
Default:		Off
Off	0	Encoder feedback disabled
On	1	Encoder feedback enabled

Communication information

Modbus Instance no/DeviceNet no:	43051
Profibus slot/index	168/210
EtherCAT and CANopen index (hex)	4beb
Profinet IO index	19435
Fieldbus format	UInt
Modbus format	UInt

Encoder Pulses [22C]

Only visible if the Encoder option board is installed. This parameter describes the number of pulses per rotation for your encoder, i.e. it is encoder specific. For more information please see the encoder manual.

22C	Enc Pulses
Default:	1024
Range:	5–16384

Communication information

Modbus Instance no/DeviceNet no:	43052
Profibus slot/index	168/211
EtherCAT and CANopen index (hex)	4bec
Profinet IO index	19436
Fieldbus format	Long, 1=1 pulse
Modbus format	EInt

Encoder Speed [22D]

Only visible if the Encoder option board is installed and added in menus 1x0. This parameter shows the measured motor speed. To check if the encoder is correctly installed, set Encoder Feedback [22B] to Off, run the AC drive at any speed and compare with the value in this menu. The value in this menu [22D] should be about the same as the motor speed [230]. If you get the wrong sign for the value, swap encoder input A and B.

22D	Enc Speed
Unit:	rpm
Resolution:	speed measured via the encoder

NOTE: If accessed via communication, the signal is unreliable at speeds outside -32768 ... 32767.

Communication information

Modbus Instance no/DeviceNet no:	42911
Profibus slot/index	168/70
EtherCAT and CANopen index (hex)	4b5f
Profinet IO index	19295
Fieldbus format	Int, 1=1 rpm
Modbus format	Int

Motor PWM [22E]

Menus for advanced setup of motor modulation properties PWM = Pulse Width Modulation).

NOTE: Menus [22E1] - [22E3] are only visible if [22A] is set to "Advanced".

PWM Fswitch [22E1]

Set the PWM switching frequency of the AC drive

22E1	PWM Fswitch
Default:	3.00 kHz (2 kHz for models 48-293/295 and 48-365)
Range	1.50 - 6.00kHz
Resolution	0.01kHz

NOTE: Maximum is 8 kHz if [222] Motor freq > 400 Hz and if < 400 Hz max remains at 6 kHz.

Communication information

Modbus Instance no/DeviceNet no:	43053
Profibus slot/index	168/212
EtherCAT and CANopen index (hex)	4bed
Profinet IO index	19437
Fieldbus format	Long, 1=1Hz
Modbus format	EInt

PWM Mode [22E2]

22E2		PWM Mode
Default:		Standard
Standard	0	Standard
Sine Filt	1	Sine Filter mode for use with output Sine Filters

NOTE: Switching frequency is fixed when "Sine Filt" is selected. This means that it is not possible to control the switching frequency based on temperature.

Communication information

Modbus Instance no/DeviceNet no:	43054
Profibus slot/index	168/213
EtherCAT and CANopen index (hex)	4bee
Profinet IO index	19438
Fieldbus format	UInt
Modbus format	UInt

PWM Random [22E3]

22E3		PWM Random
Default:		Off
Off	0	Random modulation is Off.
On	1	Random modulation is active. Random frequency variation range is ± 1/8 of level set in [E22E1].

Communication information

Modbus Instance no/DeviceNet no:	43055
Profibus slot/index	168/214
EtherCAT and CANopen index (hex)	4bef
Profinet IO index	19439
Fieldbus format	UInt
Modbus format	UInt

Udc filter [22E4]

Activating the Udc filter makes the drive less responsive to fast Udc changes. This can be useful to improve system stability when connected to a weak power grid but may reduce the dynamics of motor control.

22E4		Udc filter
Default:		Off
Off	0	The Udc filter is not active.
On	1	The Udc filter is active.

Communication information

Modbus Instance no/DeviceNet no:	43040
Profibus slot/index	168/199
EtherCAT and CANopen index (hex)	4be0
Profinet IO index	19424
Fieldbus format	UInt
Modbus format	UInt

Encoder Pulse counter [22F]

Only visible if the Encoder option is installed. Added menu/parameter for accumulated QEP (Quadrature Encoder Pulse) encoder pulses. Can be preset to any value within bus format used (Int = 2 byte, Long = 4 byte).

22F	Enc Puls Ctr
Default:	0
Resolution	1

Communication information

Modbus Instance no/DeviceNet no:	42912
Profibus slot/index	168/71
EtherCAT and CANopen index (hex)	4b60
Profinet IO index	19296
Fieldbus format	Long, 1=1 quad encoder pulse
Modbus format	Int

Note: For a 1024 pulse encoder [22F] will count 1024 * 4= 4096 pulses per turn.

Encoder fault and speed monitoring [22G]

Parameters for encoder fault monitoring and speed supervision by use of the encoder feedback for detecting speed deviation compared to internal speed reference signal. Similar speed deviation functionality is also available in the Crane option, with parameters for speed bandwidth and delay time.

Encoder fault trip conditions:

1. No encoder board detected after power up and AC drive is setup to use encoder.
2. Lost communication to encoder board for more than 2 seconds.
3. If no pulses detected for set delay time [22G1] and drive in Torque Limit (TL) or Current Limit (CL).

Note: Encoder speed deviation trip re-uses "Deviation 2" trip message with ID = 2.

Encoder fault delay time [22G1]

Define the encoder fault and speed deviation delay time.

22G1	Enc F Delay
Default:	Off
Range	Off, 0.01 - 10.00 s where Off = 0

Communication information

Modbus Instance no/DeviceNet no:	43056
Profibus slot/index	168/215
EtherCAT and CANopen index (hex)	4bf0
Profinet IO index	19440
Fieldbus format	Long, 1=0.01 s
Modbus format	EInt

Encoder fault speed deviation band [22G2]

Defines the max allowed speed deviation band = difference between measured encoder speed and speed ramp output.

22G2	Enc F Band
Default:	10%
Range	0 - 400 %

Communication information

Modbus Instance no/DeviceNet no:	43057
Profibus slot/index	168/216
EtherCAT and CANopen index (hex)	4bf1
Profinet IO index	19441
Fieldbus format	Long, 1=1 %
Modbus format	EInt

Encoder max fault counter [22G3]

This is a measured signal showing the maximum time that the speed deviation has exceeded the allowed speed deviation band level, set in [22G2]. The parameter is intended to be used during commissioning for setting up [22G1] and [22G2] to avoid nuisance trips and can be cleared by setting it to 0.

22G3	Max EncFCtr
Default:	0.000s
Range	0.00 - 10.00 s

Communication information

Modbus Instance no/DeviceNet no:	42913
Profibus slot/index	168/78
EtherCAT and CANopen index (hex)	4b61
Profinet IO index	19297
Fieldbus format	Long, 1=0.001s
Modbus format	EInt

NOTE: The value is volatile and lost at power down. It is possible to reset the value by clearing the parameter.

Phase order [22H]

Phase sequence for motor output. In this menu you can correct rotation direction on the motor by selecting "reverse" instead of switching the motor cables..

22H	Phase order	
Default:		Normal
Normal	0	Normal phase order (U,V,W)
Reverse	1	Reverse phase order (U, W, V)

Communication information

Modbus Instance no/DeviceNet no:	43058
Profibus slot/index	168/217
EtherCAT and CANopen index (hex)	4bf2
Profinet IO index	19442
Fieldbus format	UInt
Modbus format	UInt

Motor type [22I]

In this menu select type of motor. Omron AC drives can control Asynchronous motors, Permanent Magnet Synchronous Motor and Synchronous Reluctance Motors.

22I Motor Type		
Default:		Async
Async	0	Asynchronous motor
PMSM	1	Permanent magnet synchronous motor
Sync Rel	2	Synchronous Reluctance motor

Communication information

Modbus Instance no/DeviceNet no:	43059
Profibus slot/index	168/218
EtherCAT and CANopen index (hex)	4bf3
Profinet IO index	19443
Fieldbus format	UInt
Modbus format	UInt

NOTE: If PMSM is selected in menu [22I] it is recommended to enter [22J] Extend data. The following will be set automatically if PMSM is selected in menu [22I]:

- **Menu "Spin start [33A] "will be hidden. Means that spinstart is not possible.**

Extend data [22J]

Additional motor parameters for Permanent Magnet Synchronous Motors (PMSM) and Synchronous Reluctance motors.

This menu is only available if PMSM or Sync Rel is selected in menu [22I].

BEMF [22J1]

Set the back EMF of the motor at the nominal operating point. This parameter may not be explicitly available from the manufacturer, but can then be computed from the electrical constant Ke and the nominal speed.

22J1 BEMF	
Default:	Motor dependent (V)
Range:	100-700 V
Resolution	1 V

Communication information

Modbus Instance no/DeviceNet no:	43391
Profibus slot/index	170/40
EtherCAT and CANopenindex (hex)	4d3f
Profinet IO index	19775
Fieldbus format	Long, 1=0.1V
Modbus format	EInt

Rs (mΩ/ph) [22J2]

Set the per phase resistance.

22J2 Rs (mΩ/ph)		
Default:		Undef
Undef		Undefined
Range:		0.000001-40.000000 ohm

Communication information

Modbus Instance no/DeviceNet no:	43392
Profibus slot/index	170/41
EtherCAT and CANopen index (hex)	4d40
Profinet IO index	19776
Fieldbus format	Long, 1=0.000001
Modbus format	EInt

Lsd (mH/ph) [22J3]

Set the per phase d-axis inductance.

22J3 Lsd (mH/ph)		
Default:		Undef
Undef		Undefined
Range:		0.001-10000.000 mH

Communication information

Modbus Instance no/DeviceNet no:	43393
Profibus slot/index	170/42
EtherCAT and CANopen index (hex)	4d41
Profinet IO index	19777
Fieldbus format	Long, 1=0.001
Modbus format	EInt

Lsq (mH/ph) [22J4]

Set the per phase q-axis inductance.

22J4	Lsq (mH/ph)	
Default:		Undef
Undef		Undefined
Range:		0.001-10000.000 mH

Communication information

Modbus Instance no/DeviceNet no:	43394
Profibus slot/index	170/43
EtherCAT and CANopen index (hex)	4d42
Profinet IO index	19778
Fieldbus format	Long, 1=0.001
Modbus format	EInt

11.4.5 Motor Protection [230]

This function protects the motor against overload based on the standard IEC 60947-4-2.

Motor I^2t Type [231]

The motor protection function makes it possible to protect the motor from overload as published in the standard IEC 60947-4-2. It does this using "Motor I2t Current [232]" as a reference. The "Motor I2t Time [233]" is used to define the time behaviour of the function. The current set in [232] can be delivered infinite in time. If for instance in [233] a time of 1000 s is chosen the upper curve of Fig. 107 is valid. The value on the x-axis is the multiple of the current chosen in [232]. The time [233] is the time that an overloaded motor is switched off or is reduced in power at 1.2 times the current set in [232].

231	Mot I^2t Type	
Default:		Trip
Off	0	I^2t motor protection is not active.
Trip	1	When the I^2t time is exceeded, the AC drive will trip on "Motor I^2t".
Limit	2	This mode helps to keep the inverter running when the Motor I2t function is just before tripping the AC drive. The trip is replaced by current limiting with a maximum current level set by the value out of the menu [232]. In this way, if the reduced current can drive the load, the AC drive continues running. If there is no reduction in thermal load, the drive will trip.
Limit Spd	3	This mode is similar to "Limit T" but it limits the speed instead of the torque. This can be useful in for e.g. pump applications where the load increases with the speed. A minimum allowed speed can be set in menu [238]

Communication information

Modbus Instance no/DeviceNet no:	43061
Profibus slot/index	168/220
EtherCAT and CANopen index (hex)	4bf5
Profinet IO index	19445
Fieldbus format	UInt
Modbus format	UInt

NOTE: When Mot I2t Type=Limit, the AC drive can control the speed < MinSpeed to reduce the motor current.

Motor I^2t Current [232]

Sets the current limit for the motor I^2t protection in percent of I_{MOT}.

232	Mot I^2t Curr
Default:	100% of I_{MOT}
Range:	0–150% of I_{MOT} (set in menu [224])

Communication information

Modbus Instance no/DeviceNet no:	43062
Profibus slot/index	168/221
EtherCAT and CANopen index (hex)	4bf6
Profinet IO index	19446
Fieldbus format	Long, 1=1%
Modbus format	EInt

NOTE: When the selection Limit is set in menu [231], the value must be above the no-load current of the motor.

Motor I^2t Time [233]

Sets the time of the I^2t function. After this time the limit for the I^2t is reached if operating with 120% of the I^2t current value. Valid when start from 0 rpm.

NOTE: Not the time constant of the motor.

233	Mot I^2t Time
Default:	60 s
Range:	60–1200 s

Communication information

Modbus Instance no/DeviceNet no:	43063
Profibus slot/index	168/222
EtherCAT and CANopen index (hex)	4bf7
Profinet IO index	19447
Fieldbus format	Long, 1=1 s
Modbus format	EInt

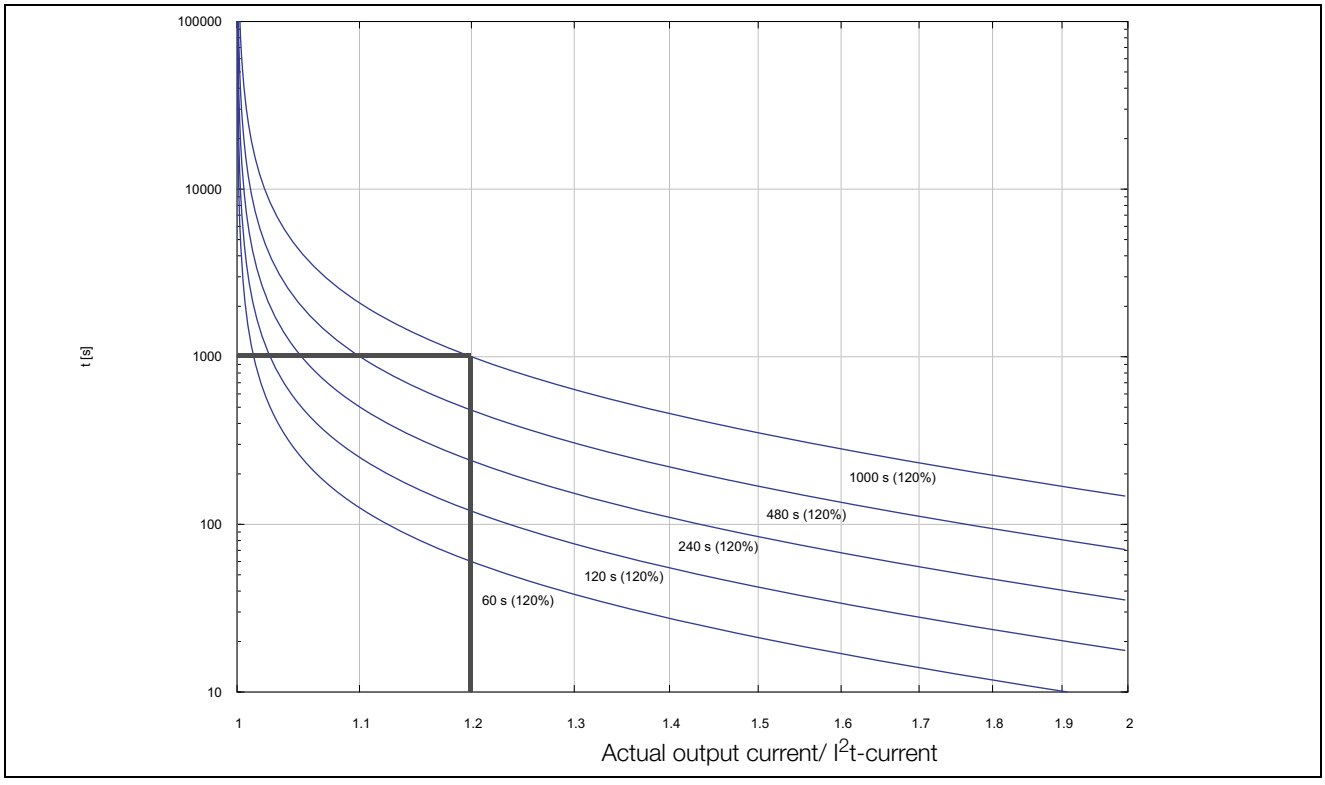

Fig. 107 I^2t function

Fig. 107 shows how the function integrates the square of the motor current according to the "Mot I^2t Curr [232]" and the "Mot I^2t Time [233]".

When the selection Trip is set in menu [231] the AC drive trips if this limit is exceeded.

When the selection Limit is set in menu [231] the AC drive reduces the torque if the integrated value is 95% or closer to the limit, so that the limit cannot be exceeded.

NOTE: If it is not possible to reduce the current, the AC drive will trip after exceeding 110% of the limit.

Example

In Fig. 107 the thick grey line shows the following example.

- Menu “[232] Mot I^2t Curr” is set to 100%.
  1.2 x 100% = 120%
- Menu “[233] Mot I^2t Time” is set to 1000 s.

This means that the AC drive will trip or reduce the current (depending on the setting in menu [231]) after 1000 s if the current is 1.2 times of 100% nominal motor current.

Thermal Protection [234]

This menu selects active sensors for PTC motor protection and activates/deactivates PT100 motor protection. Select active PT100 sensors in menu [236]. The PTC sensor connected to the first board is activated if two boards are installed but only one PTC sensor is activated.

Only visible if one or two PTC/PT100 option boards are installed. The motor thermistors (PTC) must comply with DIN 44081/44082. Please refer to the manual for the PTC/ PT100 option board.

234		Thermal Prot
Default:		Off
Off	0	PTC and PT100 motor protection are disabled.
1xPTC	1	Activates one PTC sensor.
PT100	2	Activates PT100 protection.
1xPTC+ PT100	3	Activate one PTC sensor and PT100 protection.
2xPTC	4	Activates two PTC sensors.
2xPTC+ PT100	5	Activates PTC sensors and PT100 protection.

Communication information

Modbus Instance no/DeviceNet no:	43064
Profibus slot/index	168/223
EtherCAT and CANopen index (hex)	4bf8
Profinet IO index	19448
Fieldbus format	UInt
Modbus format	UInt

NOTE: PTC option and PT100 selections can only be selected in menu [234] if one or two option boards are mounted.

NOTE: If you select the PTC option, the PT100 inputs as motor protection are ignored.

Motor Class [235]

Only visible if the PTC/PT100 option board is installed. Set the class of motor used. The trip levels for the PT100 sensor will automatically be set according to the setting in this menu.

235		Mot Class
Default:		F 140°C
A 100°C	0	
E 115°C	1	
B 120°C	2	
F 140°C	3	
F Nema 145°C	4	
H 165°C	5	

Communication information

Modbus Instance no/DeviceNet no:	43065
Profibus slot/index	168/224
EtherCAT and CANopen index (hex)	4bf9
Profinet IO index	19449
Fieldbus format	UInt
Modbus format	UInt

NOTE: This menu is only valid for PT 100.

PT100 Inputs [236]

Sets which of PT100 inputs (3 inputs per board) that should be used for thermal protection. Deselecting not used PT100 inputs on the PTC/PT100 option board in order to ignore those inputs, i.e. extra external wiring is not needed if port is not used.

236		PT100 Inputs
Default:		PT100 1+2+3
Selection:		PT100 1, PT100 2, PT100 1+2, PT100 3, PT100 1+3, PT100 2+3, PT100 1+2+3, PT100 1-4, PT100 1-5, PT100 1-6
PT100 1	1	Channel 1 used for PT100 protection
PT100 2	2	Channel 2 used for PT100 protection
PT100 1+2	3	Channel 1+2 used for PT100 protection
PT100 3	4	Channel 3 used for PT100 protection
PT100 1+3	5	Channel 1+3 used for PT100 protection
PT100 2+3	6	Channel 2+3 used for PT100 protection
PT100 1+2+3	7	Channel 1+2+3 used for PT100 protection

PT100 1-4	8	Channel 1 - 4 used for PT100 protection
PT100 1-5	9	Channel 1 - 5 used for PT100 protection
PT100 1-6	10	Channel 1 - 6 used for PT100 protection

Communication information

Modbus Instance no/DeviceNet no:	43066
Profibus slot/index	168/225
EtherCAT and CANopen index (hex)	4bfa
Profinet IO index	19450
Fieldbus format	UInt
Modbus format	UInt

NOTE: This menu is only active if PT100 is enabled in menu [234].

Motor PTC [237]

For AC drive sizes B to D (SX-V D40P7 to D4037), C2 & D2 (SX-V A4011 to A4055), C69 & D69 (SX-VD61P5 to D6055) and C2(69) & D2(69) (SX-VA61P5 to A6055) there is optional possibility to directly connect motor PTC (not to be mixed up with PTC/PT100 option board, see Chapter 13.10 page 237).

In this menu the internal motor PTC hardware option is activated. This PTC input complies with DIN 44081/ 44082. For electrical specification please refer to the separate manual for the PTC/PT100 option board, same data applies (could be found on industrial.omron.eu).

This menu is only visible if a PTC (or resistor <2 kOhm) is connected to terminals X1: 78–79. See Chapter 4.5 page 51 and Chapter 4.5.1 page 51.

NOTE: This function is not related to PTC/PT100 option board.

To enable the function:

1. Connect the thermistor wires to X1: 78–79 or for testing the input, connect a resistor to the terminals . Use a resistor value between 50 and 2000 ohm. Menu [237] will now appear.
2. Activate input by setting menu "[237] Motor PTC"=On.

If activated and <50 ohm a sensor error trip will occur. The fault message "Motor PTC" is shown.

If the function is disabled and the PTC or resistor is removed, the menu will disappear after the next power on.

237 Motor PTC		
Default:		Off
Off	0	Motor PTC protection is deactivated
On	1	Motor PTC protection is activated

Communication information

Modbus Instance no/DeviceNet no:	43067
Profibus slot/index	168/226
EtherCAT and CANopen index (hex)	4bfb
Profinet IO index	19451
Fieldbus format	UInt
Modbus format	UInt

I²t Min Spd [238]

Configures minimum allowed speed when [231] is set to "Limit Spd". E.g. used for pumps that should not operate under some speed.

238 I²t Min Spd	
Default:	0 rpm
Range:	0 - Max Speed
Dependent on:	Set/View ref [310]

11.4.6 Parameter Set Handling [240]

There are four different parameter sets available in the AC drive. These parameter sets can be used to set the AC drive up for different processes or applications such as different motors used and connected, activated PID controller, different ramp time settings, etc.

A parameter set consists of all parameters with the exception of the Global parameters. The Global parameters are only able to have one value for all parameter sets.
Following parameters are Global: [211] Language, [217] Local Remote, [218] Lock Code, [220] Motor Data, [241] Select Set, [260] Serial Communication and [21B]Mains Supply Voltage .

NOTE: Actual timers are common for all sets. When a set is changed the timer functionality will change according to the new set, but the timer value will stay unchanged.

Select Set [241]

Here you select the parameter set. Every menu included in the parameter sets is designated A, B, C or D depending on the active parameter set. Parameter sets can be selected from the keyboard, via the programmable digital inputs or via serial communication. Parameter sets can be changed during the run. If the sets are using different motors (M1 to M4) the set will be changed only when the motor is stopped.

241		Select Set
Default:		A
Selection:		A, B, C, D, DigIn, Com, Option
A	0	Fixed selection of one of the 4 parameter sets A, B, C or D.
B	1	
C	2	
D	3	
DigIn	4	Parameter set is selected via a digital input. Define which digital input in menu "[520] Digital inputs".
Com	5	Parameter set is selected via serial communication.
Option	6	The parameter set is set via an option. Only available if the option can control the selection.

Communication information

Modbus Instance no/DeviceNet no:	43022
Profibus slot/index	168/181
EtherCAT and CANopen index (hex)	4bce
Profinet IO index	19406
Fieldbus format	UInt
Modbus format	UInt

The active set can be viewed with function [721] VSD status.

NOTE: Parameter set cannot be changed during run if the parameter set includes change of the motor set (M2-M4). In this case always stop the motor before changing parameter set.

Prepare parameter Set when different Motor data M1 - M4:

1. Select desired parameter Set to be set in [241] A - D.
2. Select "Motor Set [212]" if other than the default Set M1.
3. Set relevant motor data in the Menu group [220].
4. Set other desired parameter settings to belong to this parameter Set.

To prepare a Set for another motor, repeat these steps.

Copy Set [242]

This function copies the content of a parameter set into another parameter set.

242		Copy Set
Default:		A>B
A>B	0	Copy set A to set B
A>C	1	Copy set A to set C
A>D	2	Copy set A to set D
B>A	3	Copy set B to set A
B>C	4	Copy set B to set C
B>D	5	Copy set B to set D
C>A	6	Copy set C to set A
C>B	7	Copy set C to set B
C>D	8	Copy set C to set D
D>A	9	Copy set D to set A
D>B	10	Copy set D to set B
D>C	11	Copy set D to set C

Communication information

Modbus Instance no/DeviceNet no:	43021
Profibus slot/index	168/180
EtherCAT and CANopen index (hex)	4bcd
Profinet IO index	19405
Fieldbus format	UInt
Modbus format	UInt

NOTE: The actual value of menu [310] will not be copied into the other set.

A>B means that the content of parameter set A is copied into parameter set B.

Load Default Values Into Set [243]

With this function three different levels (factory settings) can be selected for the four parameter sets. When loading the default settings, all changes made in the software are set to factory settings. This function also includes selections for loading default settings to the four different Motor Data Sets.

243		Default>Set
Default:		A
A	0	Only the selected parameter set will revert to its default settings.
B	1	
C	2	
D	3	
ABCD	4	All four parameter sets will revert to the default settings.
Factory	5	All settings, except [211], [221]-[228], [261] and [923], will revert to the default settings.
M1	6	Only the selected motor set will revert to its default settings.
M2	7	
M3	8	
M4	9	
M1M2M3 M4	10	All four motor sets will revert to default settings.

Communication information

Modbus Instance no/DeviceNet no:	43023
Profibus slot/index	168/182
EtherCAT and CANopen index (hex)	4bcf
Profinet IO index	19407
Fieldbus format	UInt
Modbus format	UInt

NOTE: Trip log hour counter and other VIEW ONLY menus are not regarded as settings and will be unaffected.

NOTE: If "Factory" is selected, the message "Sure?" is displayed. Press the + key to display "Yes" and then Enter to confirm.

NOTE: The parameters in menu "[220] Motor data", are not affected by loading defaults when restoring parameter sets A–D.

Copy All Settings to Control Panel [244]

All the settings can be copied into the control panel including the motor data. Start commands will be ignored during copying.

244		Copy to CP
Default:		No Copy
No Copy	0	Nothing will be copied
Copy	1	Copy all settings

Communication information

Modbus Instance no/DeviceNet no:	43024
Profibus slot/index	168/183
EtherCAT and CANopen index (hex)	4bd0
Profinet IO index	19408
Fieldbus format	UInt
Modbus format	UInt

NOTE: The actual value of menu [310] will not be copied into control panel memory set.

Load Settings from Control Panel [245]

This function can load all four parameter sets from the control panel to the AC drive. Parameter sets from the source AC drive are copied to all parameter sets in the target AC drive, i.e. A to A, B to B, C to C and D to D.

Start commands will be ignored during loading.

245 🔒 Load from CP		
Default:		No Copy
No Copy	0	Nothing will be loaded.
A	1	Data from parameter set A is loaded.
B	2	Data from parameter set B is loaded.
C	3	Data from parameter set C is loaded.
D	4	Data from parameter set D is loaded.
ABCD	5	Data from parameter sets A, B, C and D are loaded.
A+Mot	6	Parameter set A and Motor data are loaded.
B+Mot	7	Parameter set B and Motor data are loaded.
C+Mot	8	Parameter set C and Motor data are loaded.
D+Mot	9	Parameter set D and Motor data are loaded.
ABCD+Mot	10	Parameter sets A, B, C, D and Motor data are loaded.
M1	11	Data from motor 1 is loaded.
M2	12	Data from motor 2 is loaded.
M3	13	Data from motor 3 is loaded.
M4	14	Data from motor 4 is loaded.
M1M2M3M4	15	Data from motor 1, 2, 3 and 4 are loaded.
All	16	All data is loaded from the control panel.

Communication information

Modbus Instance no/DeviceNet no:	43025
Profibus slot/index	168/184
EtherCAT and CANopen index (hex)	4bd1
Profinet IO index	19409
Fieldbus format	UInt
Modbus format	UInt

NOTE: Loading from the control panel will not affect the value in menu [310].

11.4.7 Trip Autoreset/Trip Conditions [250]

The benefit of this feature is that occasional trips that do not affect the process will be automatically reset. Only when the failure keeps on coming back, recurring at defined times and therefore cannot be solved by the AC drive, will the unit give an alarm to inform the operator that attention is required.

For all trip functions that can be activated by the user you can select to control the motor down to zero speed according to set deceleration ramp to avoid water hammer.

Also see section 12.2, page 226.

Autoreset example:

In an application it is known that the main supply voltage sometimes disappears for a very short time, a so-called “dip”. That will cause the AC drive to trip an “Undervoltage alarm”. Using the Autoreset function, this trip will be acknowledged automatically.

- Enable the Autoreset function by making the reset input continuously high.
- Activate the Autoreset function in the menu [251], Number of trips.
- Select in menu [259] Undervoltage the trip conditions that shall be allowed to be automatically reset by the Autoreset function, after the set delay time has expired.

Number of Trips [251]

Any number set above 0 activates the Autoreset. This means that after a trip, the AC drive will restart automatically according to the number of attempts selected. No restart attempts will take place unless all conditions are normal.

If the Autoreset counter (not visible) contains more trips than the selected number of attempts, the Autoreset cycle will be interrupted. No Autoreset will then take place.

If there are no trips for more than 10 minutes, the Autoreset counter decreases by one.

If the maximum number of trips has been reached, the trip message hour counter (8x0 menu) is marked with an "A".

Trip can be reset with a normal reset, but to re-activate the auto-reset functionality the auto-reset counter must be reset.

This is done by de-activate the always high remote-reset input and then activate it again.

Example:

- Number of allowed autoreset attempts [251]= 5.
- Within 10 minutes 6 trips occur.
- At the 6th trip there is no autoreset, because the autoreset counter is set to allow only 5 attempts to autoreset a trip.
- To reset the autoreset counter, de-activate the always high remote-reset input and then activate it again.
- The autoreset counter is now zeroed.

251	No of Trips
Default:	0 (no Autoreset)
Range:	0–10 attempts

Communication information

Modbus Instance no/DeviceNet no:	43071
Profibus slot/index	168/230
EtherCAT and CANopen index (hex)	4bff
Profinet IO index	19455
Fieldbus format	UInt, 1=1
Modbus format	UInt

NOTE: An auto reset is delayed by the remaining ramp time.

Over temperature [252]

Delay time starts counting when the fault is gone. When the time delay has elapsed, the alarm will be reset if the function is active.

252	Over temp	
Default:		Off
Off	0	Off
1–3600	1–3600	1–3600 s

Communication information

Modbus Instance no/DeviceNet no:	43072
Profibus slot/index	168/231
EtherCAT and CANopen index (hex)	4c00
Profinet IO index	19456
Fieldbus format	Long, 1=1 s
Modbus format	EInt

NOTE: An auto reset is delayed by the remaining ramp time.

Over volt D [253]

Delay time starts counting when the fault is gone. When the time delay has elapsed, the alarm will be reset if the function is active**.**

253	Over volt D	
Default:		Off
Off	0	Off
1–3600	1–3600	1–3600 s

Communication information

Modbus Instance no/DeviceNet no:	43075
Profibus slot/index	168/234
EtherCAT and CANopen index (hex)	4c03
Profinet IO index	19459
Fieldbus format	Long, 1=1 s
Modbus format	EInt

NOTE: An auto reset is delayed by the remaining ramp time.

Over volt G [254]

Delay time starts counting when the fault is gone When the time delay has elapsed, the alarm will be reset if the function is active.

254 Over volt G		
Default:		Off
Off	0	Off
1–3600	1–3600	1–3600 s

Communication information

Modbus Instance no/DeviceNet no:	43076
Profibus slot/index	168/235
EtherCAT and CANopen index (hex)	4c04
Profinet IO index	19460
Fieldbus format	Long, 1=1 s
Modbus format	EInt

Over volt [255]

Delay time starts counting when the fault is gone. When the time delay has elapsed, the alarm will be reset if the function is active.

255 Over volt		
Default:		Off
Off	0	Off
1–3600	1–3600	1–3600 s

Communication information

Modbus Instance no/DeviceNet no:	43077
Profibus slot/index	168/236
EtherCAT and CANopen index (hex)	4c05
Profinet IO index	19461
Fieldbus format	Long, 1=1 s
Modbus format	EInt

Motor Lost [256]

Delay time starts counting when the fault is gone. When the time delay has elapsed, the alarm will be reset if the function is active.

256 Motor Lost		
Default:		Off
Off	0	Off
1–3600	1–3600	1–3600 s

NOTE: Only visible when Motor Lost is selected in menu [423].

Communication information

Modbus Instance no/DeviceNet no:	43083
Profibus slot/index	168/242
EtherCAT and CANopen index (hex)	4c0b
Profinet IO index	19467
Fieldbus format	Long, 1=1 s
Modbus format	EInt

Locked Rotor [257]

Delay time starts counting when the fault is gone. When the time delay has elapsed, the alarm will be reset if the function is active**.**

257 Locked Rotor		
Default:		Off
Off	0	Off
1–3600	1–3600	1–3600 s

Communication information

Modbus Instance no/DeviceNet no:	43086
Profibus slot/index	168/245
EtherCAT and CANopen index (hex)	4c0e
Profinet IO index	19470
Fieldbus format	Long, 1=1 s
Modbus format	EInt

Power Fault [258]

Delay time starts counting when the fault is gone. When the time delay has elapsed, the alarm will be reset if the function is active**.**

258 Power Fault		
Default:		Off
Off	0	Off
1–3600	1–3600	1–3600 s

Communication information

Modbus Instance no/DeviceNet no:	43087
Profibus slot/index	168/246
EtherCAT and CANopen index (hex)	4c0f
Profinet IO index	19471
Fieldbus format	Long, 1=1 s
Modbus format	EInt

Undervoltage [259]

Delay time starts counting when the fault is gone. When the time delay has elapsed, the alarm will be reset if the function is active**.**

259 Undervoltage		
Default:		Off
Off	0	Off
1–3600	1–3600	1–3600 s

Communication information

Modbus Instance no/DeviceNet no:	43088
Profibus slot/index	168/247
EtherCAT and CANopen index (hex)	4c10
Profinet IO index	19472
Fieldbus format	Long, 1=1 s
Modbus format	EInt

Motor I^2t [25A]

Delay time starts counting when the fault is gone. When the time delay has elapsed, the alarm will be reset if the function is active**.**

25A Motor I^2t		
Default:		Off
Off	0	Off
1–3600	1–3600	1–3600 s

Communication information

Modbus Instance no/DeviceNet no:	43073
Profibus slot/index	168/232
EtherCAT and CANopen index (hex)	4c01
Profinet IO index	19457
Fieldbus format	Long, 1=1 s
Modbus format	EInt

Motor I^2t Trip Type [25B]

Select the preferred way to react to a Motor I^2t trip.

25B Motor I^2t TT		
Default:		Trip
Trip	0	The motor will coast
Deceleration	1	The motor will decelerate

Communication information

Modbus Instance no/DeviceNet no:	43074
Profibus slot/index	168/233
EtherCAT and CANopen index (hex)	4c02
Profinet IO index	19458
Fieldbus format	UInt
Modbus format	UInt

PT100 [25C]

Delay time starts counting when the fault is gone. When the time delay has elapsed, the alarm will be reset if the function is active.

25C PT100		
Default:		Off
Off	0	Off
1–3600	1–3600	1–3600 s

Communication information

Modbus Instance no/DeviceNet no:	43078
Profibus slot/index	168/237
EtherCAT and CANopen index (hex)	4c06
Profinet IO index	19462
Fieldbus format	Long, 1=1 s
Modbus format	EInt

PT100 Trip Type [25D]

Delay time starts counting when the fault is gone. When the time delay has elapsed, the alarm will be reset if the function is active.

25D PT100 TT	
Default:	Trip
Selection:	Same as menu [25B]

Communication information

Modbus Instance no/DeviceNet no:	43079
Profibus slot/index	168/238
EtherCAT and CANopen index (hex)	4c07
Profinet IO index	19463
Fieldbus format	Uint
Modbus format	UInt

PTC [25E]

Delay time starts counting when the fault is gone. When the time delay has elapsed, the alarm will be reset if the function is active.

25E PTC		
Default:		Off
Off	0	Off
1–3600	1–3600	1–3600 s

Communication information

Modbus Instance no/DeviceNet no:	43084
Profibus slot/index	168/243
EtherCAT and CANopen index (hex)	4c0c
Profinet IO index	19468
Fieldbus format	Long, 1=1 s
Modbus format	Elnt

PTC Trip Type [25F]

Select the preferred way to react to a PTC trip.

25F PTC TT	
Default:	Trip
Selection:	Same as menu [25B]

Communication information

Modbus Instance no/DeviceNet no:	43085
Profibus slot/index	168/244
EtherCAT and CANopen index (hex)	4c0d
Profinet IO index	19469
Fieldbus format	Ulnt
Modbus format	Ulnt

External Trip [25G]

Delay time starts counting when the fault is gone. When the time delay has elapsed, the alarm will be reset if the function is active.

25G Ext Trip		
Default:		Off
Off	0	Off
1–3600	1–3600	1–3600 s

Communication information

Modbus Instance no/DeviceNet no:	43080
Profibus slot/index	168/239
EtherCAT and CANopen index (hex)	4c08
Profinet IO index	19464
Fieldbus format	Long, 1=1 s
Modbus format	Elnt

External Trip Type [25H]

Select the preferred way to react to an alarm trip.

25H Ext Trip TT	
Default:	Trip
Selection:	Same as menu [25B]

Communication information

Modbus Instance no/DeviceNet no:	43081
Profibus slot/index	168/240
EtherCAT and CANopen index (hex)	4c09
Profinet IO index	19465
Fieldbus format	Ulnt
Modbus format	Ulnt

Communication Error [25I]

Delay time starts counting when the fault is gone. When the time delay has elapsed, the alarm will be reset if the function is active.

25I Com Error		
Default:		Off
Off	0	Off
1–3600	1–3600	1–3600 s

Communication information

Modbus Instance no/DeviceNet no:	43089
Profibus slot/index	168/248
EtherCAT and CANopen index (hex)	4c11
Profinet IO index	19473
Fieldbus format	Long, 1=1 s
Modbus format	Elnt

Communication Error Trip Type [25J]

Select the preferred way to react to a communication trip.

25J Com Error TT	
Default:	Trip
Selection:	Same as menu [25B]

Communication information

Modbus Instance no/DeviceNet no:	43090
Profibus slot/index	168/249
EtherCAT and CANopen index (hex)	4c12
Profinet IO index	19474
Fieldbus format	Ulnt
Modbus format	Ulnt

Min Alarm [25K]

Delay time starts counting when the fault is gone. When the time delay has elapsed, the alarm will be reset if the function is active.

25K Min Alarm		
Default:		Off
Off	0	Off
1–3600	1–3600	1–3600 s

Communication information

Modbus Instance no/DeviceNet no:	43091
Profibus slot/index	168/250
EtherCAT and CANopen index (hex)	4c13
Profinet IO index	19475
Fieldbus format	Long, 1=1 s
Modbus format	EInt

Min Alarm Trip Type [25L]

Select the preferred way to react to a min alarm trip.

25L Min Alarm TT	
Default:	Trip
Selection:	Same as menu [25B]

Communication information

Modbus Instance no/DeviceNet no:	43092
Profibus slot/index	168/251
EtherCAT and CANopen index (hex)	4c14
Profinet IO index	19476
Fieldbus format	UInt
Modbus format	UInt

Max Alarm [25M]

Delay time starts counting when the fault is gone. When the time delay has elapsed, the alarm will be reset if the function is active.

25M Max Alarm		
Default:		Off
Off	0	Off
1–3600	1–3600	1–3600 s

Communication information

Modbus Instance no/DeviceNet no:	43093
Profibus slot/index	168/252
EtherCAT and CANopen index (hex)	4c15
Profinet IO index	19477
Fieldbus format	Long, 1=1 s
Modbus format	EInt

Max Alarm Trip Type [25N]

Select the preferred way to react to a max alarm trip.

25N Max Alarm TT	
Default:	Trip
Selection:	Same as menu [25B]

Communication information

Modbus Instance no/DeviceNet no:	43094
Profibus slot/index	168/253
EtherCAT and CANopen index (hex)	4c16
Profinet IO index	19478
Fieldbus format	UInt
Modbus format	UInt

Over current F [25O]

Delay time starts counting when the fault is gone. When the time delay has elapsed, the alarm will be reset if the function is active.

25O Over curr F		
Default:		Off
Off	0	Off
1–3600	1–3600	1–3600 s

Communication information

Modbus Instance no/DeviceNet no:	43082
Profibus slot/index	168/241
EtherCAT and CANopen index (hex)	4c0a
Profinet IO index	19466
Fieldbus format	Long, 1=1 s
Modbus format	EInt

Pump [25P]

Delay time starts counting when the fault is gone. When the time delay has elapsed, the alarm will be reset if the function is active.

25P Pump		
Default:		Off
Off	0	Off
1–3600	1–3600	1–3600 s

Communication information

Modbus Instance no/DeviceNet no:	43095
Profibus slot/index	168/254
EtherCAT and CANopen index (hex)	4c17
Profinet IO index	19479
Fieldbus format	Long, 1=1 s
Modbus format	EInt

Over Speed [25Q]

Delay time starts counting when the fault is gone. When the time delay has elapsed, the alarm will be reset if the function is active.

25Q Over speed		
Default:		Off
Off	0	Off
1–3600	1–3600	1–3600 s

Communication information

Modbus Instance no/DeviceNet no:	43096
Profibus slot/index	169/0
EtherCAT and CANopen index (hex)	4c18
Profinet IO index	19480
Fieldbus format	Long, 1=1 s
Modbus format	Elnt

External Motor Temperature [25R]

Delay time starts counting when the fault disappears. When the time delay has elapsed, the alarm will be reset if the function is active.

25R Ext Mot Temp		
Default:		Off
Off	0	Off
1–3600	1–3600	1–3600 s

Communication information

Modbus Instance no/DeviceNet no:	43097
Profibus slot/index	168/239
EtherCAT and CANopen index (hex)	4c19
Profinet IO index	19481
Fieldbus format	Long, 1=1 s
Modbus format	Elnt

External Motor Trip Type [25S]

Select the preferred way to react to an alarm trip.

25S Ext Mot TT	
Default:	Trip
Selection:	Same as menu [25B]

Communication information

Modbus Instance no/DeviceNet no:	43098
Profibus slot/index	168/240
EtherCAT and CANopen index (hex)	4c1a
Profinet IO index	19482
Fieldbus format	Ulnt
Modbus format	Ulnt

Liquid cooling low level [25T]

Delay time starts counting when the fault disappears. When the time delay has elapsed, the alarm will be reset if the function is active.

25T LC Level		
Default:		Off
Off	0	Off
1–3600	1–3600	1–3600 s

Communication information

Modbus Instance no/DeviceNet no:	43099
Profibus slot/index	169/3
EtherCAT and CANopen index (hex)	4c1b
Profinet IO index	19483
Fieldbus format	Long, 1=1 s
Modbus format	Elnt

Liquid Cooling Low level Trip Type [25U]

Select the preferred way to react to an alarm trip.

25U LC Level TT	
Default:	Trip
Selection:	Same as menu [25B]

Communication information

Modbus Instance no/DeviceNet no:	43100
Profibus slot/index	169/4
EtherCAT and CANopen index (hex)	4c1c
Profinet IO index	19484
Fieldbus format	Ulnt
Modbus format	Ulnt

Brake Fault [25V]

Delay time starts counting when the fault disappears. When the time delay has elapsed, the alarm will be reset if the function is active.

25V Brk Fault		
Default		Off
Off	0	Autoreset not activated.
1 - 3600s	1 - 3600	Brake fault auto reset delay time.

Communication information

Modbus Instance no/DeviceNet no:	43070
Profibus slot/index	168/229
EtherCAT and CANopen index (hex)	4bfe
Profinet IO index	19454
Fieldbus format	Long, 1=1s
Modbus format	EInt

Encoder [25W]

Encoder delay time, starts counting when the fault disappears. When the time delay has elapsed, the alarm will be reset if the function is active.

25W Encoder		
Default:		Off
Off	0	Off
1- 3600	1- 3600	1- 3600 s

Communication information

Modbus Instance no/DeviceNet no:	43561
Profibus slot/index	170/210
EtherCAT and CANopen index (hex)	4de9
Profinet IO index	19945
Fieldbus format	Long, 1=1s
Modbus format	EInt

11.4.8 Serial Communication [260]

The integrated RS485 interface on terminal X1: A+ and Bwill always be enabled regardless of setting in menu [261] Comm type. Further, it may be used in parallel to any Fieldbus option on X4 interface. Menu [262] RS232/485 and its sub menus are used to configure the integrated RS485 interface.

This function is to define the communication parameters for serial communication. There are two types of options available for serial communication, RS232/485 (Modbus/RTU) and fieldbus modules (CANopen, Profibus, DeviceNet, Modbus/TCP, Profinet IO, EtherCAT and EtherNet/IP).
For more information see Chapter 9. page 83 and respective option manual.

Comm Type [261]

Select RS232/485 [262] or Fieldbus [263].

261 Com Type		
Default:		RS232/485
RS232/485	0	Integrated RS485 interface enabled. Fieldbus interface on X4 disabled (RESET).
Fieldbus	1	Fieldbus selected (CANopen, Profibus, DeviceNet, Modbus/TCP, Profinet IO, EtherCAT or EtherNet/IP) Integrated RS485 interface enabled (can be used in parallel to fieldbus option).

Communication information

Modbus Instance no/DeviceNet no:	43031
Profibus slot/index	168/190
EtherCAT and CANopen index (hex)	4bd7
Profinet IO index	19415
Fieldbus format	UInt
Modbus format	UInt

NOTE: Toggling the setting in this menu will perform a soft reset (re-boot) of the Fieldbus module.

RS232/485 [262]

Press Enter to set up the parameters for RS232/485 (Modbus/RTU) communication.

262 RS232/485

Baud rate [2621]

Set the baud rate for the communication.

NOTE: This address is only used for the integrated/ isolated RS485 option.

2621 Baudrate		
Default:		9600
2400	0	Selected baud rate
4800	1	
9600	2	
19200	3	
38400	4	
57600	5	
115200	6	

Communication information

Modbus Instance no/DeviceNet no:	43032
Profibus slot/index	168/191
EtherCAT and CANopen index (hex)	4bd8
Profinet IO index	19416
Fieldbus format	UInt
Modbus format	UInt

Address [2622]

Enter the unit address for the AC drive.

NOTE: This address is only used for the integrated/ isolated RS485 option

2622 Address	
Default:	1
Selection:	1–247

Communication information

Modbus Instance no/DeviceNet no:	43033
Profibus slot/index	168/192
EtherCAT and CANopen index (hex)	4bd9
Profinet IO index	19417
Fieldbus format	UInt, 1=1
Modbus format	UInt

Fieldbus [263]

Press Enter to set up the parameters for fieldbus communication.

263 Fieldbus

Address [2631]

Enter/view the unit/node address of the AC drive. Read and write access for CANopen, Profibus, DeviceNet. Read - only for EtherCAT.

2631 Address	
Default:	62
Range:	CANopen 1-127, Profibus 0–126, DeviceNet 0–63
Node address valid for CANopen (RW), Profibus(RW), DeviceNet (RW) and EtherCAT (RO).	

Communication information

Modbus Instance no/DeviceNet no:	43034
Profibus slot/index	168/199
EtherCAT and CANopen index (hex)	4bda
Profinet IO index	19418
Fieldbus format	UInt, 1=1
Modbus format	UInt

Process Data Mode [2632]

Enter the mode of process data (cyclic data). For further information, see the Fieldbus option manual.

NOTE: For CANopen module this menu is forced to "8".

2632 PrData Mode		
Default:		Basic
None	0	Control/status information is not used.
Basic	4	4 byte process data control/status information is used.
Extended	8	4 byte process data (same as Basic setting) + additional proprietary protocol for advanced users is used.

Communication information

Modbus Instance no/DeviceNet no:	43035
Profibus slot/index	168/194
EtherCAT and CANopen index (hex)	4bdb
Profinet IO index	19419
Fieldbus format	UInt
Modbus format	UInt

Read/Write [2633]

Select read/write to control the inverter over a fieldbus network. For further information, see the Fieldbus option manual.

2633 Read/Write		
Default:		RW
RW	0	
Read	1	
Valid for process data. Select R (read only) for logging process without writing process data. Select RW in normal cases to control inverter.		

Communication information

Modbus Instance no/DeviceNet no:	43036
Profibus slot/index	168/195
EtherCAT and CANopen index (hex)	4bdc
Profinet IO index	19420
Fieldbus format	UInt
Modbus format	UInt

Additional Process Values [2634]

Define the number of additional process values sent in cyclic messages.

NOTE: For CANopen module this menu is forced to "Basic".

2634 AddPrValues	
Default:	0
Range:	0-8

Communication information

Modbus Instance no/DeviceNet no:	43039
Profibus slot/index	168/198
EtherCAT and CANopen index (hex)	4bdf
Profinet IO index	19423
Fieldbus format	UInt, 1=1
Modbus format	UInt

CANBaudrate [2635]

Set the baud rate for CANopen fieldbus.

NOTE: Used for CANopen module only

2635 CANBaudrate	
Default:	8
0	10 kbps
1	20 kbps
2	50 kbps
3	Reserve
4	100 kbps
5	125 kbps
6	250 kbps
7	500 kbps
8	1 Mbps
9	Auto *

Communication information

Modbus Instance no/DeviceNet no:	43030
Profibus slot/index	168/189
EtherCAT and CANopen index (hex)	4bd6
Profinet IO index	19414
Fieldbus format	UInt, 1=1
Modbus format	UInt

* Under normal traffic conditions, i.e. with cyclic bus traffic above 2 Hz, the baud rate should be detected within 5 seconds.

NOTE: The automatic baud rate detection will NOT work if there is no traffic on the network.

Communication Fault [264]

Main menu for communication fault/warning settings. For further details please see the Fieldbus option manual.

Menus [2641] and [2642] are specifically used for Fieldbus option mounted on interface X4.

Menus [2643] and [2644] are specifically used for integrated RS485 interface on X1: A+ and B-.

Communication Fault Mode [2641]

Selects action if a Fieldbus fault is detected.

2641 ComFlt Mode		
Default:		Off
Off	0	No communication supervision.
Trip	1	RS232/485 selected: The AC drive will trip if there is no communication for time set in parameter [2642]. Fieldbus selected: The AC drive will trip if: 1. The internal communication between the control board and fieldbus option is lost for time set in parameter [2642]. 2. If a serious network error has occurred.
Warning	2	RS232/485 selected: The AC drive will give a warning if there is no communication for time set in parameter [2642]. Fieldbus selected: The AC drive will give a warning if: 1. The internal communication between the control board and fieldbus option is lost for time set in parameter [2642]. 2. If a serious network error has occurred.

NOTE: Menu [214] and/or [215] must be set to COM to activate the communication fault function.

Communication information

Modbus Instance no/DeviceNet no:	43037
Profibus slot/index	168/196
EtherCAT and CANopen index (hex)	4bdd
Profinet IO index	19421
Fieldbus format	UInt
Modbus format	UInt

Communication Fault Time [2642]

Defines the delay time for the trip/warning.

2642 ComFlt Time	
Default:	0.5 s
Range:	0.1-15 s

Communication information

Modbus Instance no/DeviceNet no:	43038
Profibus slot/index	168/197
EtherCAT and CANopen index (hex)	4bde
Profinet IO index	19422
Fieldbus format	Long, 1=0.1 s
Modbus format	EInt

485 Fault Mode [2643]

Selects action for timeout on integrated RS485 interface on X1: A+ and B-.

2643 485Flt Mode		
Default:		Off
Off	0	No communication supervision.
Trip	1	The AC drive will trip if there is no communication for time set in parameter [2644].
Warning	2	The AC drive will give a warning if there is no communication for time set in parameter [2644].

NOTE: Menu [214] and/or [215] must be set to COM to activate the communication fault function.

485 Fault Time [2644]

Defines the delay time for the integrated RS485 trip/ warning.

2644 485Flt Time	
Default:	0.5 s
Range:	0.1-15 s

Keybord Communication Fault Mode [2645]

When keyboard is removed in drive running condition and "[214] Ref Control" or "[215] Run/Stp Ctrl" is set to "Keyboard" the drive should come to stop..

2645 KbdComFMode		
Default:		Trip
Off	0	No supervison of keybord.
Trip	1	The drive will trip after time set in parameter [2646] if keyboard/control board is removed.
Warning	2	The drive will give a warning after time set in parameter [2646] if the keyboard/ control board is removed.

Keyboard Communication Fault Time [2646]

Defines the delay time for detection of a removed control panel provided that 2645 is either trip or warning.

2646 KbdComFTime	
Default:	2 s
Range:	0.1 s - 15 s

Communication fault for control panel port

This feature enables communication fault for external controlling equipment connected to the CP port. Most importantly this enables detection if a wireless connection, via BLE or WiFi CP, is disconnected.

Fault is only enabled if all of following conditions are met:

- "[214] Ref Control" or "[215] Run/Stp Ctrl" is set to "Com".
- A device connected to the CP port has written to any of the communication command registers:
  - Run (2 or 42902)
  - RunR (3 or 42903)
  - RunL (4 or 42904)
  - Reference (42905)
- Communication command Run and one or both of RunR or RunL are set.
- unction enabled (Trip or Warning) in menu "[2647] CPportFMode"
- o communication on the control panel port for "[2648] CPportFTime" X seconds.

Control Panel port Fault Mode [2647]

2647 CPportFMode		
Default:		Trip
Off	0	No supervision of the control panel.
Trip	1	The drive will trip after time set in parameter [2648] if control panel is removed.
Warning	2	The drive will give a warning after time set in parameter [2648] if the control panel is removed.

Control Panel port Fault Time [2648]

2648 CPportFTime	
Default:	10.0 s
Range:	0.1 s - 15.0 s

Ethernet [265]

Settings for Ethernet module (Modbus/TCP, Profinet IO). For further information, see the Fieldbus option manual.

NOTE: The Ethernet module must be re-booted to activate the below settings. For example by toggling parameter [261]. Non-initialized settings indicated by flashing display text.

IP Address [2651]

2651 IP Address	
Default:	0.0.0.0

Communication information

Modbus Instance no/DeviceNet no:	42701, 42702, 42703, 42704
Profibus slot/index	167/115, 167/116, 167/117, 167/118
EtherCAT and CANopen index (hex)	4a8d, 4a8e, 4a8f, 4a90
Profinet IO index	19085, 19086, 19087, 19088
Fieldbus format	UInt, 1=1
Modbus format	UInt

MAC Address [2652]

2652 MAC Address	
Default:	An unique number for the Ethernet module.

Communication information

Modbus Instance no/DeviceNet no:	42705, 42706, 42707, 42708, 42709, 42710
Profibus slot/index	167/119, 167/120, 167/121, 167/122, 167/123, 167/124
EtherCAT and CANopen index (hex)	4a91, 4a92, 4a93, 4a94, 4a95, 4a96,
Profinet IO index	19089, 19090, 19091, 19092, 19093, 19094
Fieldbus format	UInt, 1=1
Modbus format	UInt

Subnet Mask [2653]

2653	Subnet Mask
Default:	0.0.0.0

Communication information

Modbus Instance no/DeviceNet no:	42711, 42712, 42713, 42714
Profibus slot/index	167/125, 167/126, 167/127, 167/128
EtherCAT and CANopen index (hex)	4a97, 4a98, 4a99, 4a9a
Profinet IO index	19095, 19096, 19097, 19098
Fieldbus format	UInt, 1=1
Modbus format	UInt

Gateway [2654]

2654	Gateway
Default:	0.0.0.0

Communication information

Modbus Instance no/DeviceNet no:	42715, 42716, 42717, 42718
Profibus slot/index	167/129, 167/130, 167/131, 167/132
EtherCAT and CANopen index (hex)	4a9b, 4a9c, 4a9e, 4a9f
Profinet IO index	19099, 19100, 19101, 19102
Fieldbus format	UInt, 1=1
Modbus format	UInt

DHCP [2655]

2655	DHCP
Default:	Off
Selection:	On/Off

Communication information

Modbus Instance no/DeviceNet no:	42719
Profibus slot/index	167/133
EtherCAT and CANopen index (hex)	4a9f
Profinet IO index	19103
Fieldbus format	UInt
Modbus format	UInt

Fieldbus Signals [266]

Defines mapping for additional process values. For further information, see the Fieldbus option manual.

FB S1/Wr1 - FB S8/Wr8[2661]-[2668]

Used to create a block of parameters which can be written via communication.

2661	FB S1/Wr1
Default:	0
Range:	0-65535

FB S9/Rd1 - FB S16/Rd8 [266A]-[266G]

Used to create a block of parameters which can be read via communication.

266A	FB S9/Rd1
Default:	0
Range:	0-65535

NOTE: For Modbus all 16 fieldbus mappings can be used either as read or write. Configuration of register map is made menu [2661]-[266G] or Modbus range 42801-42816. Register read/write access is made in Modbus range 42821-42836.

FB Status [269]

Sub menus showing status of Fieldbus parameters. Please see the Fieldbus manual for detailed information.

269	FB Status

11.4.9 Wireless [270]

Parameters for configuring wireless communication links such as WiFi or Bluetooth Low Energy (BLE). Changing any of these parameters will trigger a reconfiguration action change.

Wireless Mode [271]

Available options depend on capability of the connected control panel.

271 WirelessMode		
Default:		Off
Off	0	Wireless interfaces turned off
WiFi	1	WiFi interface enabled
BLE	2	Bluetooth Low Energy interface enabled

WiFi Options [272]

This menu is hidden unless menu "WirelessMode [271]" is set to WiFi.

After a sub-menu has been changed the response from the WiFi module can be observed in menu [272A] WiFi Status. If everything went well a "Config OK" is expected to be shown for 60 seconds.

WiFi Mode [2721]

Configures the 2.4 GHz WiFi interface of the control panel to either act as an AccessPoint (allowing clients to connect to the drive) or as station (i.e. connect to an already existing WiFi network as a client).

NOTE: Only one client can connect and communicate with the drive at same time.

2721 WiFi Mode		
Default:		AccessPoint
AccessPoint	0	Configure WiFi interface to act as an Access Point (AP) allowing client devices like mobile phones or tablets to connect to the network provided by the Drive. Remaining WiFi parameters [272X] will decide the properties of the provided WiFi network.
Station	1	Configure WiFi interface to connect to an existing WiFi network provided by an external Router/AP. Remaining WiFi parameters [272X] will be used to select the network to connect to and to provide the required credentials.

Channel [2722]

Sets the WiFi channel to operate on in AccessPoint mode. Menu hidden in Station mode (will adopt to the channel used by AP/Router connected to).

NOTE: Only channels 1-11 should be used in US.

2722 Channel	
Default:	5
0 - 13	2.4 GHz WiFi channels to be used in AccessPoint mode.

Encryption [2723]

Selects the encryption standard to be used for the transmitted WiFi data.

2723 Encryption		
Default:		WPA2
Open	0	No encryption of the wireless link
WEP	1	WEP encryption
WPA2	2	WPA-2 encryption

DHCP [2724]

Selects how IP properties are handled. Static implies user give address while DHCP implies that DHCP server on network assign an IP address. In case [2721] WiFi Mode is AccessPoint, DHCP is automatically selected.

2724 DHCP		
Default:		DHCP
Static	0	Static implies user set IP properties via menus [2727 - 2729].
DHCP	1	Server on network assign IP properties.

SSID [2725]

First 16 chars of network name to connect to if "[2721]WiFi Mode" = Station or SSID network name to broadcast if "[2721] WiFi Mode" = AccessPoint.

2725 SSID	
Default:	Omron_<5 random digits>

Password [2726]

Password to login to router/AP when "[2721] WiFi Mode" = Station or Password for clients to use if "[2721] WiFi Mode" = AccessPoint. In case [2723] Encryption is WPA2 minimum password length is 8 characters. In case of WEP only 5 or 13 character passwords are accepted.

Can't be read via field bus and not visible after entered.

2726 Password	
Default:	12345678

NOTE: Accepts only 32 - 126 ascii char in menus SSID [2725] and Password [2726] entry as IEEE standard speaks of 'printable ASCII characters' (in the range of 32 to 126).

IP Address [2727]

Shows static address to use if "[2724] DHCP" is set to Static. Shows assigned address if "[2724] DHCP" is set to DHCP. This is the IP address given to the Drive, use this address in client software to connect to the AC Drive.

2727 IP Address	
Default:	192.168.1.1

Subnet Mask [2728]

Shows static subnet mask to use if "[2724] DHCP" is set to Static. Shows assigned subnet mask if "[2724] DHCP" is set to DHCP.

2728 Subnet Mask	
Default:	255.255.255.0

WiFi Status [272A]

Status of WiFi module is shown in this menu "[272A] WiFi Status". Status is set directly from control panel (that host the WiFi module).

272A WiFi Status		
Default:		OK
OK	0	No error
Mode error	1	Initialization failure of AP/Station mode
AP pwd err	2	AP password faulty
SSID error	3	SSID length error
SecPar error	4	Security parameters or SSID supplied is wrong
Sta Disconn	5	Disconnect from router/AP in station mode
NetConf err	6	Network configuration error (IP or DHCP)
Config OK	7	If no error, this is shown 60 seconds after configuration update, then it goes back to OK.

Bluetooth (BLE) options [273]

This menu is hidden if BLE not selected in menu "[271] WirelessMode".

BluetoothID [2731]

Shows bluetooth device ID if connected control panel have bluetooth capability.

2731 BluetoothID	
Default:	0

NOTE: Default is 0 or if a BLE control panel is used an eight digit unique ID used in the broadcast name.

Paring key [2732]

Six digit numeric for the control panel BLE pairing with mobile or other BLE device.

2732 Paring Key	
Default:	123456

Security [274]

Possibility to limit access to control board (CB) registers from the wireless interfaces.

Security mode [2741]

Sets the security mode to be used.

2741 Sec. Mode		
Default:		Open
Open	0	All requests from wireless clients should be forwarded by the control panel to control board.
Password	1	Wireless client must supply a password before access to control board registers is granted. Once access is given it will last as long as the session.

Password [2742]

Eight (8) chars in four consecutive Modbus registers. Configuration of the password to be written by the client to open up wireless access. Four consecutive Modbus registers are used. Their Modbus addresses are 49550 to 49554.

This menu is only shown if menu “Security mode [2741]” is set to Password (1).

2742 Password	
Default:	“ “ (i.e. an empty string)

11.5 Process and Application Parameters [300]

These parameters are mainly adjusted to obtain optimum process or machine performance.

The read-out, references and actual values depends on selected process source, [321]:

Table 36

Selected process source	Unit for reference and actual value	Resolution
Speed	rpm	4 digits
Torque	%	3 digits
PT100	°C	3 digits
Frequency	Hz	3 digits

11.5.1 Set/View Reference Value [310]

View reference value

As default the menu [310] is in view operation. The value of the active reference signal is displayed. The value is displayed according to selected process source, [321] or the process unit selected in menu [322].

Set reference value

If the function “Reference Control [214]” is set to “Keyboard”, the reference value can be set in menu “Set/View Ref [310]” or as a motor potentiometer with the + and - keys (default) on the control panel. Selection is made with parameter Keyboard Reference Mode in menu [369]. The ramp times used when setting the reference value with MotPot function selected in [369] are according to menus “Acc MotPot [333]” and “Dec MotPot [334]”.
The ramp times used for the reference value when Normal function is selected in menu [369], are according to “Acc Time [331]” and “Dec Time [332]”.
Menu [310] displays on-line the actual reference value according to the Mode Settings in Table 36.

310 Set/View ref	
Default:	0 rpm
Dependent on:	Process Source [321] and Process Unit [322]
Speed mode	0 - max speed [343]
Torque mode	0 - max torque [351]
Other modes	Min according to menu [324] - max according to menu [325]

Communication information

Modbus Instance no/DeviceNet no:	42991
Profibus slot/index	168/150
EtherCAT and CANopen index (hex)	4baf
Profinet IO index	19375
Fieldbus format	Long, 1=1 rpm, 1 %,1 °C or 0.001 if Process Value/Process Ref using a [322] unit
Modbus format	EInt

NOTE: The actual value in menu [310] is not copied, or loaded from the control panel memory when Copy Set [242], Copy to CP [244] or Load from CP [245] is performed.

NOTE: If the MotPot function is used, the reference value ramp times are according to the "Acc MotPot [333]" and "Dec MotPot [334]" settings. Actual speed ramp will be limited according to "Acc Time [331]" and "Dec Time [332]".

NOTE: Write access to this parameter is only allowed when menu "Ref Control [214]" is set to Keyboard. When Reference control is used, see Chapter 9. page 71

11.5.2 Process Settings [320]

With these functions, the AC drive can be set up to fit the application. The menus [110], [120], [310], [362]-[368] and [711] use the process unit selected in [321] and [322] for the application, e.g. rpm, bar or m3/h. This makes it possible to easily set up the AC drive for the required process requirements, as well as for copying the range of a feedback sensor to set up the Process Value Minimum and Maximum in order to establish accurate actual process information.

Process Source [321]

Select the signal source for the process value that controls the motor. The Process Source can be set to act as a function of the process signal on AnIn F(AnIn), a function of the motor speed F(Speed) or as a function of a process value from serial communication F(Bus). The right function to select depends on the characteristics and behaviour of the process. If the selection Speed or Frequency is set, the AC drive will use speed, torque or frequency as reference value.

Example

An axial fan is speed-controlled and there is no feedback signal available. The process needs to be controlled within fixed process values in "m^3/hr" and a process read-out of the air flow is needed. The characteristic of this fan is that the air flow is linearly related to the actual speed. So by selecting F(Speed) as the Process Source, the process can easily be controlled.

The selection F(xx) indicates that a process unit and scaling is needed, set in menus [322]-[328]. This makes it possible to e.g. use pressure sensors to measure flow etc. If F(AnIn) is selected, the source is automatically connected to the AnIn which has Process Value as selected.

321 Proc Source		
Default:		Speed
F(AnIn)	0	Function of analogue input. E.g. via PID control, [380].
Speed	1	Speed as process reference.
PT100	3	Temperature as process reference.
F(Speed)	4	Function of speed
F(Bus)	6	Function of communication reference
Frequency	7	Frequency as process reference[1].

[1]. Only when Drive mode [213] is set to Speed or V/Hz.

NOTE: When PT100 is selected, use PT100 channel 1 on the PTC/PT100 option board.

NOTE: If Speed or Frequency is chosen in menu "[321] Proc Source", menus [322] - [328] are hidden.

NOTE: If F (Bus) is chosen in menu [321] see "11.7.1 Analogue Inputs [510]" on page 178.

Communication information

Modbus Instance no/DeviceNet no:	43302
Profibus slot/index	169/206
EtherCAT and CANopen index (hex)	4ce6
Profinet IO index	19686
Fieldbus format	UInt
Modbus format	UInt

Process Unit [322]

322 Proc Unit		
Default:		rpm
Off	0	No unit selection
%	1	Percent
°C	2	Degrees Centigrade
°F	3	Degrees Fahrenheit
bar	4	bar
Pa	5	Pascal
Nm	6	Torque
Hz	7	Frequency
rpm	8	Revolutions per minute
m^3/h	9	Cubic meters per hour
gal/h	10	Gallons per hour
ft^3/h	11	Cubic feet per hour
User	12	User defined unit

Communication information

Modbus Instance no/DeviceNet no:	43303
Profibus slot/index	169/207
EtherCAT and CANopen index (hex)	4ce7
Profinet IO index	19687
Fieldbus format	UInt
Modbus format	UInt

User-defined Unit [323]

This menu is only displayed if User is selected in menu [322]. The function enables the user to define a unit with six symbols. Use the Prev and Next key to move the cursor to required position. Then use the + and - keys to scroll down the character list. Confirm the character by moving the cursor to the next position by pressing the Next key.

Character	No. for serial comm.	Character	No. for serial comm.
Space	0	m	58
0–9	1–10	n	59
A	11	ñ	60
B	12	o	61
C	13	ó	62
D	14	ô	63
E	15	p	64
F	16	q	65
G	17	r	66
H	18	s	67
I	19	t	68
J	20	u	69
K	21	ü	70
L	22	v	71
M	23	w	72
N	24	x	73
O	25	y	74
P	26	z	75
Q	27	å	76
R	28	ä	77
S	29	ö	78
T	30	!	79
U	31	¨	80
Ü	32	#	81
V	33	$	82
W	34	%	83
X	35	&	84
Y	36	·	85
Z	37	(	86
Å	38	)	87
Ä	39	*	88
Ö	40	+	89
a	41	,	90
á	42	-	91

Character	No. for serial comm.	Character	No. for serial comm.
b	43	.	92
c	44	/	93
d	45	:	94
e	46	;	95
é	47	<	96
ê	48	=	97
ë	49	>	98
f	50	?	99
g	51	@	100
h	52	^	101
i	53	_	102
í	54	°	103
j	55	2	104
k	56	3	105
l	57		

Example:

Create a user unit named kPa.

1. When in the menu [323] press + to show the cursor.
2. Press NEXT to move the cursor to the right most position.
3. Press + until the character a is displayed.
4. Press PREV.
5. Then press the + until P is displayed and press PREV.
6. Repeat until you have entered kPa, confirm with ENTER.

323 User Unit	
Default:	No characters shown

Communication information

Modbus Instance no/DeviceNet no:	43304 - 43309
Profibus slot/index	169/208 - 169/213
EtherCAT and CANopen index (hex)	4ce8 - 4ced
Profinet IO index	19688 - 19693
Fieldbus format	UInt
Modbus format	UInt

Process Min [324]

This function sets the minimum process value allowed.

324 Process Min	
Default:	0
Range:	0.000-10000 (Speed, Torque, F(Speed), F(Torque)) -10000– +10000 (F(AnIn, PT100, F(Bus))

Communication information

Modbus Instance no/DeviceNet no:	43310
Profibus slot/index	169/214
EtherCAT and CANopen index (hex)	4cee
Profinet IO index	19694
Fieldbus format	Long, 1=1 rpm, 1 %,1 °C or 0.001 if Process Value/Process Ref using a [322] unit
Modbus format	EInt

Process Max [325]

This menu is not visible when speed, torque or frequency is selected. The function sets the value of the maximum process value allowed.

325 Process Max	
Default:	0
Range:	0.000-10000

Communication information

Modbus Instance no/DeviceNet no:	43311
Profibus slot/index	169/215
EtherCAT and CANopen index (hex)	4cef
Profinet IO index	19695
Fieldbus format	Long, 1=1 rpm, 1 %,1 °C or 0.001 if Process Value/Process Ref using a [322] unit
Modbus format	EInt

Ratio [326]

This menu is not visible when speed, frequency or torque is selected. The function sets the ratio between the actual process value and the motor speed so that it has an accurate process value when no feedback signal is used. See Fig. 108.

326 Ratio		
Default:		Linear
Linear	0	Process is linear related to speed/torque
Quadratic	1	Process is quadratic related to speed/ torque

Communication information

Modbus Instance no/DeviceNet no:	43312
Profibus slot/index	169/216
EtherCAT and CANopen index (hex)	4cf0
Profinet IO index	19696
Fieldbus format	UInt
Modbus format	UInt

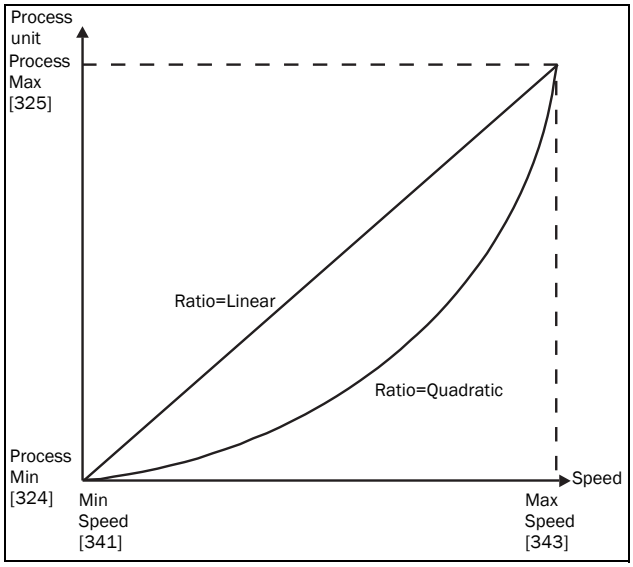

Fig. 108 Ratio

F(Value), Process Min [327]

This function is used for scaling if no sensor is used. It offers you the possibility of increasing the process accuracy by scaling the process values. The process values are scaled by linking them to known data in the AC drive. With "F(Value) Proc Min [327]" the precise value at which the entered "Process Min [324]"is valid can be entered.

NOTE: If Speed, Torque or Frequency is chosen in menu "[321] Proc Source", menus [322]- [328] are hidden.

327 F(Val) PrMin		
Default:		Min
Min	-1	According to Min Speed setting in [341].
Max	-2	According to Max Speed setting in [343].
0.000-10000	0-10000	0.000-10000

Communication information

Modbus Instance no/DeviceNet no:	43313
Profibus slot/index	169/217
EtherCAT and CANopen index (hex)	4cf1
Profinet IO index	19697
Fieldbus format	Long, 1=1 rpm, 1 %
Modbus format	EInt

F(Value), Process Max [328]

This function is used for scaling if no sensor is used. It offers you the possibility of increasing the process accuracy by scaling the process values. The process values are scaled by linking them to known data in the AC drive. With F(Value), Proc Max the precise value at which the entered "Process Max [525]" is valid can be entered.

NOTE: If Speed, Torque or Frequency is chosen in menu "[321] Proc Source", menus [322]- [328] are hidden.

328 F(Val) PrMax		
Default:		Max
Min	-1	Min
Max	-2	Max
0.000-10000	0-10000	0.000-10000

Communication information

Modbus Instance no/DeviceNet no:	43314
Profibus slot/index	169/218
EtherCAT and CANopen index (hex)	4cf2
Profinet IO index	19698
Fieldbus format	Long, 1=1 rpm, 1 %
Modbus format	EInt

Example

A conveyor belt is used to transport bottles. The required bottle speed needs to be within 10 to 100 bottles/s. Process characteristics:

10 bottles/s = 150 rpm
100 bottles/s = 1500 rpm
The amount of bottles is linearly related to the speed of the conveyor belt.

Set-up:

"Process Min [324]" = 10
"Process Max [325]" = 100
"Ratio [326]" = linear
"F(Value), ProcMin [327]" = 150
"F(Value), ProcMax [328]" = 1500

With this set-up, the process data is scaled and linked to known values which results in an accurate control.

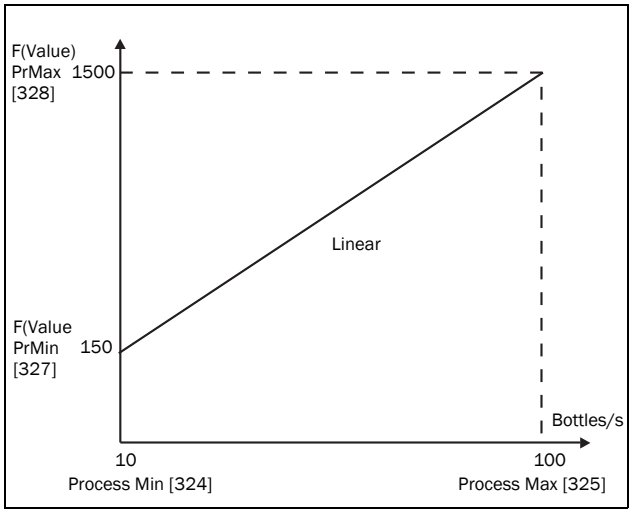

Fig. 109

11.5.3 Start/Stop settings [330]

Submenu with all the functions for acceleration, deceleration, starting, stopping, etc.

Acceleration Time [331]

The acceleration time is defined as the time it takes for the motor to accelerate from 0 rpm to nominal motor speed.

NOTE: If the Acc Time is too short, the motor is accelerated according to the Torque Limit. The actual Acceleration Time may then be longer than the value set.

331	Acc Time
Default:	10.0 s
Range:	0.50–3600 s

Communication information

Modbus Instance no/DeviceNet no:	43101
Profibus slot/index	169/5
EtherCAT and CANopen index (hex)	4c1d
Profinet IO index	19485
Fieldbus format	Long, 1=0.01 s
Modbus format	EInt

Fig. 110 shows the relationship between nominal motor speed/max speed and the acceleration time. The same is valid for the deceleration time.

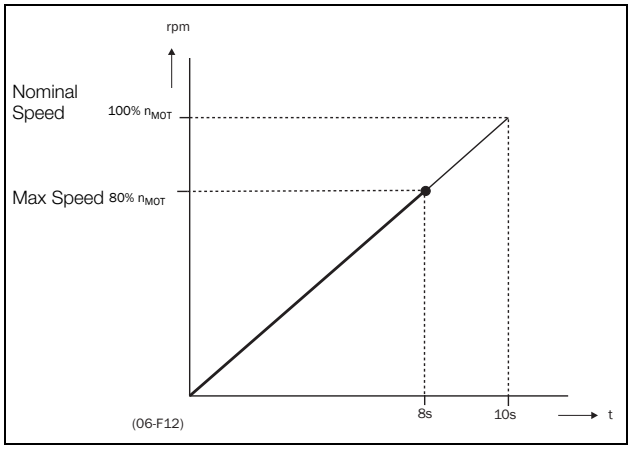

Fig. 110 Acceleration time and maximum speed

Fig. 111 shows the settings of the acceleration and deceleration times with respect to the nominal motor speed.

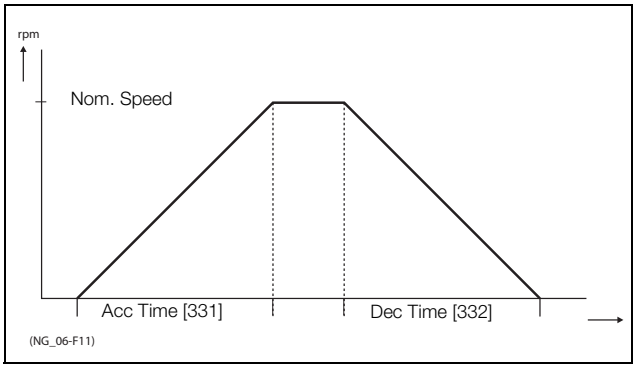

Fig. 111 Acceleration and deceleration times

Deceleration Time [332]

The deceleration time is defined as the time it takes for the motor to decelerate from nominal motor speed to 0 rpm.

332	Dec Time
Default:	10.0 s
Range:	0.50–3600 s

Communication information

Modbus Instance no/DeviceNet no:	43102
Profibus slot/index	169/6
EtherCAT and CANopen index (hex)	4c1e
Profinet IO index	19486
Fieldbus format	Long, 1=0.01 s
Modbus format	Elnt

NOTE: If the Dec Time is too short and the generator energy cannot be dissipated in a brake resistor, the motor is decelerated according to the overvoltage limit. The actual deceleration time may be longer than the value set.

Acceleration Time Motor Potentiometer [333]

It is possible to control the speed of the AC drive using the motor potentiometer function. This function controls the speed with separate up and down commands, over remote signals. The MotPot function has separate ramps settings which can be set in "Acc MotPot [333]" and "Dec MotPot [334]".

If the MotPot function is selected, this is the acceleration time for the MotPot up command. The acceleration time is defined as the time it takes for the motor potentiometer value to increase from 0 rpm to nominal speed.

333	Acc MotPot
Default:	16.0 s
Range:	0.50–3600 s

Communication information

Modbus Instance no/DeviceNet no:	43103
Profibus slot/index	169/7
EtherCAT and CANopen index (hex)	4c1f
Profinet IO index	19487
Fieldbus format	Long, 1=0.01 s
Modbus format	Elnt

Deceleration Time Motor Potentiometer [334]

If the MotPot function is selected, this is the deceleration time for the "MotPot" down command. The deceleration time is defined as the time it takes for the motor potentiometer value to decrease from nominal speed to 0 rpm.

334	Dec MotPot
Default:	16.0 s
Range:	0.50–3600 s

Communication information

Modbus Instance no/DeviceNet no:	43104
Profibus slot/index	169/8
EtherCAT and CANopen index (hex)	4c20
Profinet IO index	19488
Fieldbus format	Long, 1=0.01 s
Modbus format	Elnt

Acceleration Time to Minimum Speed [335]

If minimum speed, [341]>0 rpm, is used in an application, the AC drive uses separate ramp times below this level. With "Acc<MinSpeed [335]" and "Dec<MinSpeed [336]" you can set the required ramp times. Short times can be used to prevent damage and excessive pump wear due too little lubrication at lower speeds. Longer times can be used to fill up a system smoothly and prevent water hammer due to rapidly exhausting air from the pipe system.

If a Minimum speed is programmed, this parameter will be used to set the the acceleration time parameter [335] for speeds up to minimum speed at a run command. The ramp time is defined as the time it takes for the motor to accelerate from 0 rpm to nominal motor speed.

335	Acc<Min Spd
Default:	10.0 s
Range:	0.50-3600 s

Communication information

Modbus Instance no/DeviceNet no:	43105
Profibus slot/index	169/9
EtherCAT and CANopen index (hex)	4c21
Profinet IO index	19489
Fieldbus format	Long, 1=0.01 s
Modbus format	EInt

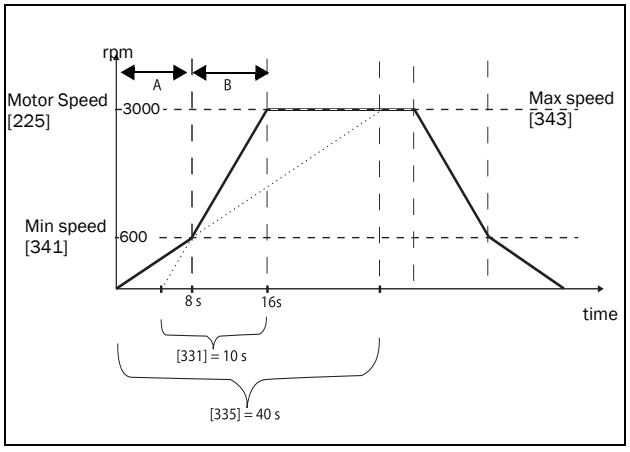

Fig. 112 Calculation example of accelerating times (graphics not proportional).

Example:

"Motor speed [225]"	3000 rpm
Minimum speed [341]	600 rpm
Maximum speed [343]	3000 rpm
Acceleration time [331]	10 seconds
Deceleration time [332]	10 seconds
Acc>Min speed[335]	40 seconds
Dec<Min speed[336]	40 seconds

A. The drive will start from 0 rpm and accelerate to Minimum speed [341] = 600 rpm in 8 seconds according to ramp time parameter Acc>Min speed [335].
Calculated as following:
600 rpm is 20% of 3000 rpm => 20% of 40 s = 8 s.

B. The acceleration continues from minimum speed level 600 rpm to maximum speed level 3000 rpm with acceleration rate according to ramp time Acceleration time [331].
Calculate by following:
3000 - 600= 2400 rpm which is 80 % of 3000 rpm => acceleration tim is 80 % x 10 s = 8 s.
This means that the total acceleration time from 0 - 3000 rpm will take 8 + 8 = 16 seconds.

Deceleration Time from Minimum Speed [336]

If a minimum speed is programmed, this parameter will be used to set the deceleration time from the minimum speed to 0 rpm at a stop command. The ramp time is defined as the time it takes for the motor to decelerate from the nominal motor speed to 0 rpm.

336	Dec<Min Spd
Default:	10.0 s
Range:	0.50-3600 s

Communication information

Modbus Instance no/DeviceNet no:	43106
Profibus slot/index	169/10
EtherCAT and CANopen index (hex)	4c22
Profinet IO index	19490
Fieldbus format	Long, 1=0.01 s
Modbus format	EInt

Acceleration Ramp Type [337]

Sets the type of all the acceleration ramps in a parameter set. See Fig. 113. Depending on the acceleration and deceleration requirements for the application, the shape of both the ramps can be selected. For applications where speed changes need to be started and stopped smoothly, such as a conveyor belt with materials that can drop following a quick speed change, the ramp shape can be adapted to a S-shape and prevent speed change shocks. For applications that are not critical in this, the speed change can be fully linear over the complete range.

337 Acc Rmp		
Default:		Linear
Linear	0	Linear acceleration ramp.
S-Curve	1	S-shape acceleration ramp.

NOTE: For S-curve ramps the ramp times, [331] and [332], defines the maximum acceleration and deceleration rated, i.e. linear part of S-curve, just as for the linear ramps. The S-curves are implemented so that for a speed step below sync speed the ramps are fully
S-shaped while for larger steps the middle part will be linear. Therefore will a S-curve ramp from 0 –sync speed take 2 x Time while a step from 0–2 x sync speed will take 3 x Time (middle part 0.5sync speed – 1.5sync speed linear). Also valid for menu [338], Deceleration ramp type.

Communication information

Modbus Instance no/DeviceNet no:	43107
Profibus slot/index	169/11
EtherCAT and CANopen index (hex)	4c23
Profinet IO index	19491
Fieldbus format	UInt
Modbus format	UInt

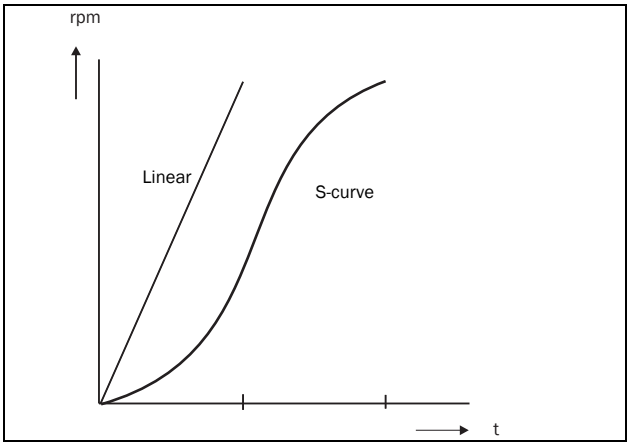

Fig. 113 Shape of acceleration ramp

Deceleration Ramp Type [338]

Sets the ramp type of all deceleration parameters in a parameter set Fig. 114.

338 Dec Rmp	
Default:	Linear
Selection:	Same as menu [337]

Communication information

Modbus Instance no/DeviceNet no:	43108
Profibus slot/index	169/12
EtherCAT and CANopen index (hex)	4c24
Profinet IO index	19492
Fieldbus format	UInt
Modbus format	UInt

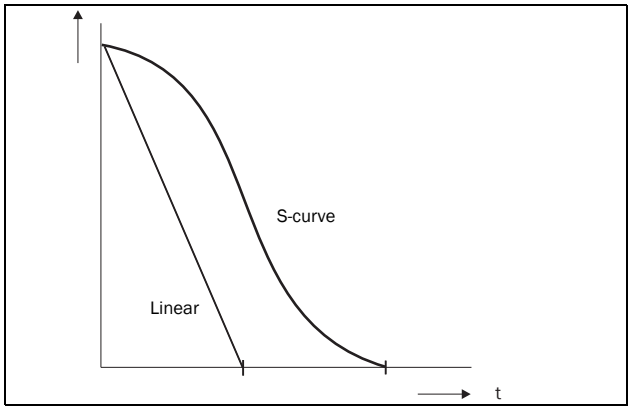

Fig. 114 Shape of deceleration ramp

Start Mode [339]

Sets the way of starting the motor when a run command is given.

339 Start Mode		
Default:		Fast (fixed)
Fast	0	The motor shaft starts rotating immediately once the Run command is given. The motor flux increases gradually.

Communication information

Modbus Instance no/DeviceNet no:	43109
Profibus slot/index	169/13
EtherCAT and CANopen index (hex)	4c25
Profinet IO index	19493
Fieldbus format	UInt
Modbus format	UInt

Spinstart [33A]

The spinstart will smoothly start a motor which is already rotating by catching the motor at the actual speed and control it to the desired speed. If in an application, such as an exhausting fan, the motor shaft is already rotating due to external conditions, a smooth start of the application is required to prevent excessive wear. With the spinstart=On, the actual control of the motor is delayed due to detecting the actual speed and rotation direction, which depend on motor size, running conditions of the motor before the Spinstart, inertia of the application, etc. Depending on the motor electrical time constant and the size of the motor, it can take maximum a couple of minutes before the motor is caught.

33A Spinstart		
Default:		Off
Off	0	No spinstart. If the motor is already running the AC drive can trip or will start with high current.
On	1	Spinstart will allow the start of a running motor without tripping or high inrush currents. If encoder feedback is used, both encoder speed and current signals are used to perform spinstart function.
Encoder	2	Only encoder speed used for detecting rotating machine, i.e. no rotating machine detection via initial motor current. Note: Only active if encoder is present. If no Encoder, functionality is equal to selection Off.

Communication information

Modbus Instance no/DeviceNet no:	43110
Profibus slot/index	169/14
EtherCAT and CANopen index (hex)	4c26
Profinet IO index	19494
Fieldbus format	UInt
Modbus format	UInt

Stop Mode [33B]

When the AC drive is stopped, different methods to come to a standstill can be selected in order to optimize the stop and prevent unnecessary wear, like water hammer. Stop Mode sets the way of stopping the motor when a Stop command is given.

33B Stop Mode		
Default:		Decel
Decel	0	The motor decelerates to 0 rpm according to the set deceleration time.
Coast	1	The motor freewheels naturally to 0 rpm.

Communication information

Modbus Instance no/DeviceNet no:	43111
Profibus slot/index	169/15
EtherCAT and CANopen index (hex)	4c27
Profinet IO index	19495
Fieldbus format	UInt
Modbus format	UInt

11.5.4 Mechanical brake control

The four brake-related menus [33C] to [33F] can be used to control mechanical brakes.

Support is included for a Brake Acknowledge signal via a digital input. It is monitored using a brake fault time parameter. Additional output and trip/warning signals are also included. The acknowledge signal is either connected from the brake contactor or from a proximity switch on the brake.

Brake not released - Brake Fault trip

During start and running the brake acknowledge signal is compared to the actual brake output signal and if no acknowledge, i.e. brake not released, while brake output is high for the Brake Fault time [33H], then a Brake trip is generated.

Brake not engaged - Brake Warning and continued operation (keep torque)

The brake acknowledge signal is compared to the actual brake output signal at stop. If acknowledge is still active, i.e. brake not engaged, while brake output is low for the Brake Engage time [33E] then a Brake warning is generated and the torque is kept, i.e. prolonging normal brake engage mode, until brake closes or an emergency action is needed by the operator, such as setting down the load.

Brake Release Time [33C]

The Brake Release Time sets the time the AC drive delays before ramping up to whatever final reference value is selected. During this time a predefined speed can be generated to hold the load where after the mechanical brake finally releases. This speed can be selected at Release Speed, [33D]. Immediate after the brake release time expiration the brake lift signal is set. The user can set a digital output or relay to the function Brake. This output or relay can control the mechanical brake.

33C Brk Release	
Default:	0.00 s
Range:	0.00–3.00 s

Communication information

Modbus Instance no/DeviceNet no:	43112
Profibus slot/index	169/16
EtherCAT and CANopen index (hex)	4c28
Profinet IO index	19496
Fieldbus format	Long, 1=0.01 s
Modbus format	EInt

Fig. 115 shows the relation between the four Brake functions.

- Brake Release Time [33C]
- Release Speed [33D]
- Brake Engage Time [33E]
- Brake Wait Time [33F]

The correct time setting depends on the maximum load and the properties of the mechanical brake. During the brake release time it is possible to apply extra holding torque by setting a release speed reference with the function release speed [33D].

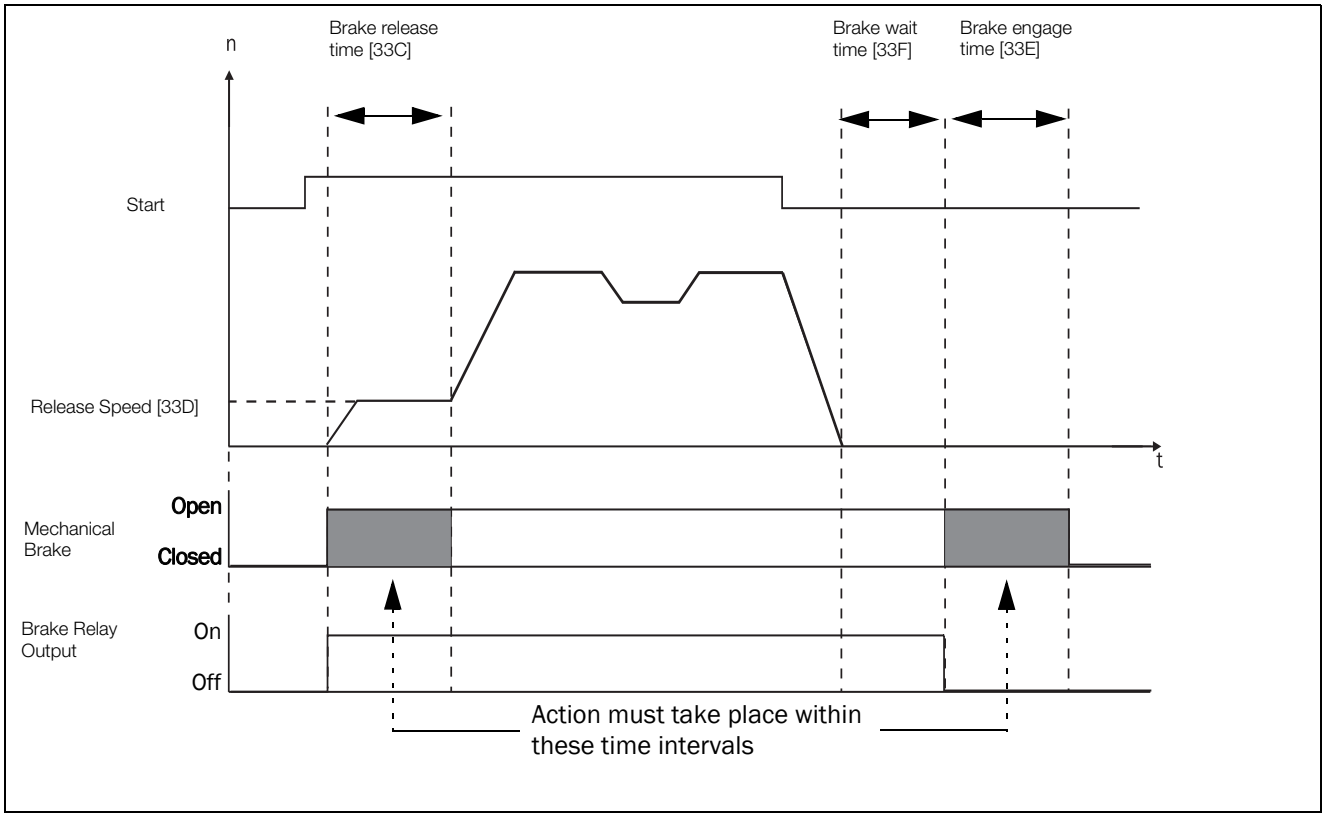

Fig. 115 Brake Output functions

NOTE: This function is designed to operate a mechanical brake via the digital outputs or relays (set to brake function) controlling a mechanical brake.

Release Speed [33D]

The release speed only operates with the brake function: brake release [33C]. The release speed is the initial speed reference during the brake release time.

33D	Release Spd
Default:	0 rpm
Range:	- 4x Sync. Speed to 4x Sync.
Depend on:	4xmotor sync speed, 1500 rpm for 1470 rpm motor.

Note: Speed signal is limited to < 32767.

Communication information

Modbus Instance no/DeviceNet no:	43113
Profibus slot/index	169/17
EtherCAT and CANopen index (hex)	4c29
Profinet IO index	19497
Fieldbus format	Int, 1=1 rpm
Modbus format	Int, 1=1 rpm

Brake Engage Time [33E]

The brake engage time is the time the load is held while the mechanical brake engages. It is also used to get a firm stop when transmissions, etc. cause "whiplash" effects. In other words, it compensates for the time it takes to engage a mechanical brake.

33E	Brk Engage
Default:	0.00 s
Range:	0.00–3.00 s

Communication information

Modbus Instance no/DeviceNet no:	43114
Profibus slot/index	169/18
EtherCAT and CANopen index (hex)	4c2a
Profinet IO index	19498
Fieldbus format	Long, 1=0.01 s
Modbus format	EInt

Wait Before Brake Time [33F]

The brake wait time is the time to keep brake open and to hold the load, either in order to be able to speed up immediately, or to stop and engage the brake.

33F	Brk Wait
Default:	0.00 s
Range:	0.00–30.0 s

Communication information

Modbus Instance no/DeviceNet no:	43115
Profibus slot/index	169/19
EtherCAT and CANopen index (hex)	4c2b
Profinet IO index	19499
Fieldbus format	Long, 1=0.01 s
Modbus format	EInt

Vector Brake [33G]

Braking by increasing the internal electrical losses in the motor.

33G	Vector Brake	
Default:		Off
Off	0	Vector brake switched off. AC drive brakes normal with voltage limit on the DC link.
On	1	Maximum AC drive current (I_{CL}) is available for braking.

Communication information

Modbus Instance no/DeviceNet no:	43116
Profibus slot/index	169/20
EtherCAT and CANopen index (hex)	4c2c
Profinet IO index	19500
Fieldbus format	UInt
Modbus format	UInt

Brake Fault trip time [33H]

The "Brake Fault trip time" for "Brake not released" function is specified in this menu.

33H	Brk Fault
Default:	1.00s
Range	0.00 - 5.00s

Communication information

Modbus Instance no/DeviceNet no:	43117
Profibus slot/index	169/21
EtherCAT and CANopen index (hex)	4c2d
Profinet IO index	19501
Fieldbus format	Long, 1=0.01s
Modbus format	EInt

Note: The Brake Fault trip time should be set to longer time than the Brake release time[33C].

The "Brake not engaged" warning is using the setting of parameter "Brake Engaged time [33E]".
Fig. 116 shows principle of brake operation for fault during run (left) and during stop (right).

Release torque [33I]

The Brake Release Time [33C] sets the time the AC drive delays before ramping up to whatever final speed reference value is selected, to allow the brake to be fully opened. During this time a holding torque to prevent roll-back of the load can be activated. The parameter Release Torque [33I] is used for this purpose.
The release torque initiates the torque reference from the speed controller during the Brake Release Time [33C]. The release torque defines a minimum level of release (holding) torque. The set release torque is internally overruled if the actual required holding torque measured at the previous closing of brake is higher.
The release torque is set with sign in order to define the holding torque direction.

Note! Function is deactivated if set to 0%.

Note! Release Torque [33I] has priority over torque reference initialization by Release Speed [33D].

33I Release Trq	
Default:	0%
Range	-400% to 400%

Communication information

Modbus Instance no/DeviceNet no:	43118
Profibus slot/index	169/22
EtherCAT and CANopen index (hex)	4c2e
Profinet IO index	19502
Fieldbus format	Long, 1=1%
Modbus format	Elnt

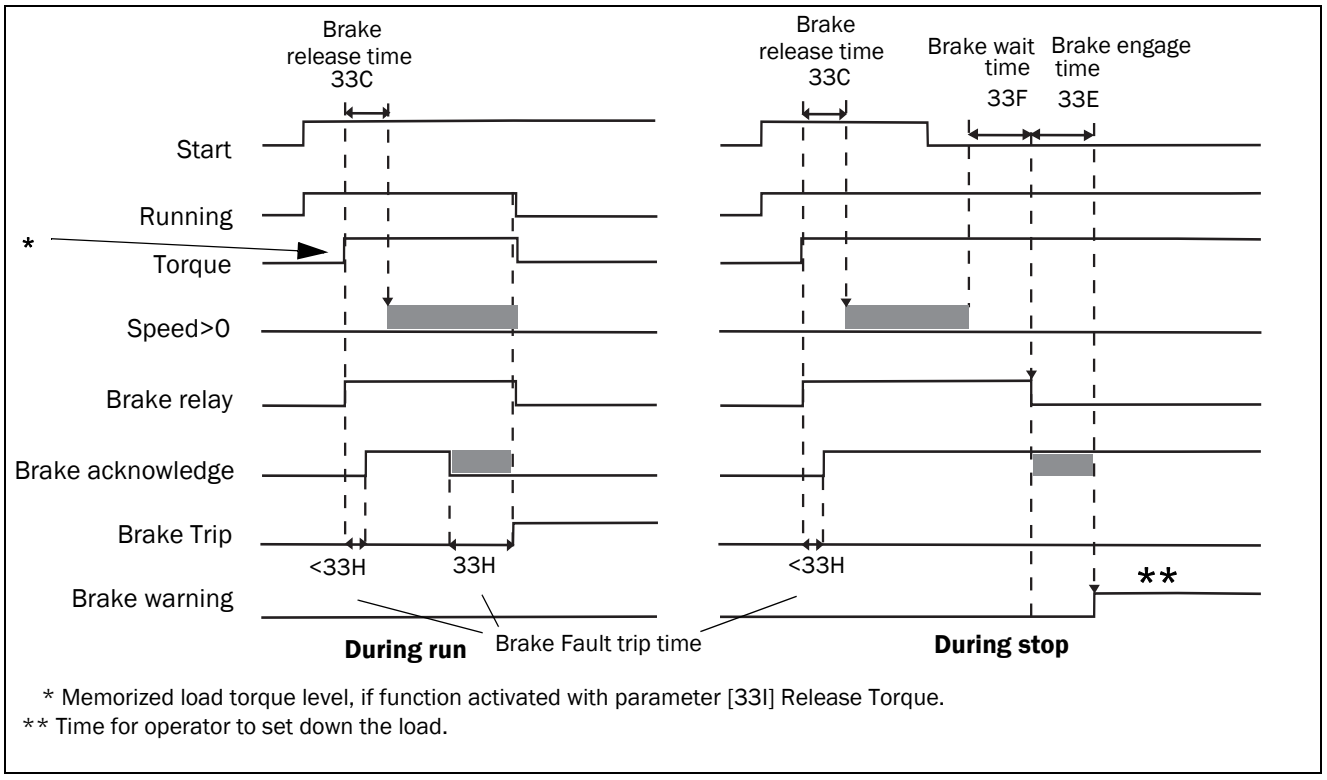

* Memorized load torque level, if function activated with parameter [33I] Release Torque.
** Time for operator to set down the load.

Fig. 116 Principle of Brake operation for fault during run and during stop

Start Vector [33K]

Select the voltage vector applied at start. The start vector is normally in the direction of the U-phase. It is also possible to sequentially select different start vectors each start. This can be advantageous as it distributes the wear more evenly between different IGBTs. In particular if DC-start is used. The start vector may also be selected based on the encoder position (when applicable).

33K Start Vector		
Default:		0
Normal (U)	0	U-phase
Sequence	1	Sequentially select different vectors
Encoder	2	Based on encoder position

Communication information

Modbus Instance no/DeviceNet no:	43119
Profibus slot/index	169/23
EtherCAT and CANopen index (hex)	4c2f
Profinet IO index	19503
Fieldbus format	UInt
Modbus format	UInt

11.5.5 Speed [340]

Menu with all parameters for settings regarding to speeds, such as Min/Max speeds, Jog speeds, Skip speeds.

Minimum Speed [341]

Sets the minimum speed. The minimum speed will operate as an absolute lower limit. Used to ensure the motor does not run below a certain speed and to maintain a certain performance.

341 Min Speed	
Default:	0 rpm
Range:	0 - Max Speed
Dependent on:	Set/View ref [310]

NOTE: A lower speed value than the set minimum speed can be shown in the display due to motor slip.

Communication information

Modbus Instance no/DeviceNet no:	43121
Profibus slot/index	169/25
EtherCAT and CANopen index (hex)	4c31
Profinet IO index	19505
Fieldbus format	Int, 1=1 rpm
Modbus format	Int, 1=1 rpm

Stop/Sleep when less than Minimum Speed [342]

With this function it is possible to put the AC drive in “sleep mode” when it is running at minimum speed for the length of time set in menu “Stp<MinSpd [342]”. The AC drive will go into sleep mode after programmed time.

When the reference signal or PID Process controller output value (if PID Process controller is used) raises the required speed value above the min speed value, the AC drive will automatically wake up and ramp up to the required speed.

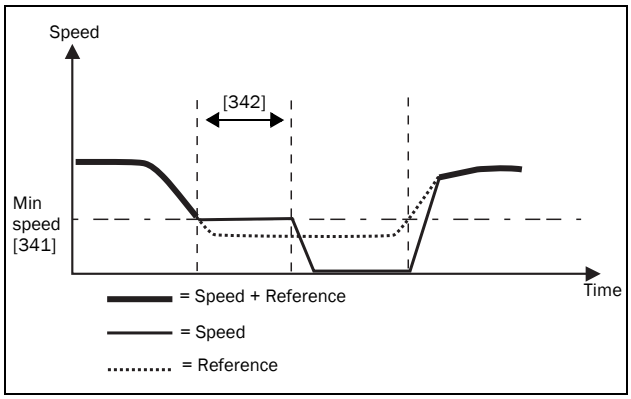

Fig. 117

If you want to use this function when having “process reference” signal via an analogue input, you need to make sure that the concerning analogue input is set up correct, meaning that AnIn Advanced parameter "AnIn1 FcMin [5134]" should be set from "Min" (=default) to "User defined" and “AnIn1 VaMin[5135]” set to a value less than “Min Speed [341]” to make it possible that the analogue input reference can go below the "Min Speed" level to activate the “Sleep mode”. This applies when PID Process controller is not used.

NOTE: If [381] PID Process controller is used, then the PID sleep functionality [386] - [389] is recommended instead of [342]. See further page 160.

NOTE: Menu [386] has higher priority than menu [342].

342 Stp<MinSpd		
Default:		Off
Off	0	Off
1–3600	1–3600	1–3600 s

Communication information

Modbus Instance no/DeviceNet no:	43122
Profibus slot/index	169/26
EtherCAT and CANopen index (hex)	4c32
Profinet IO index	19506
Fieldbus format	Long, 1=0.01 s
Modbus format	EInt

Maximum Speed [343]

Sets the maximum speed. The maximum speed will operate as an absolute maximum limit. This parameter is used to prevent damage due to high speed.
The synchronous speed (Sync-spd) is determined by the parameter motor speed [225].

343 Max Speed		
Default:		Sync Speed
Sync Speed	0	Synchronous speed, i.e. no load speed, at nominal frequency.
1-35940rpm	1- 35940	Min Speed - 4 x Motor Sync Speed

Communication information

Modbus Instance no/DeviceNet no:	43123
Profibus slot/index	169/27
EtherCAT and CANopen index (hex)	4c33
Profinet IO index	19507
Fieldbus format	Int, 1=1 rpm
Modbus format	Int, 1=1 rpm

NOTE: It is not possible to set the maximum speed lower than the minimum speed.

Note: Maximum speed [343] has priority over Min Speed [341], i.e. if [343] is set below [341] then the drive will run at [343] Max Speed with acceleration times given by [335] and [336] respectively.

Skip Speed 1 Low [344]

Within the Skip Speed range High to Low, the speed cannot be constant in order to avoid mechanical resonance in the AC drive system.

When Skip Speed Low ≤ Ref Speed ≤ Skip Speed High, then Output Speed=Skip Speed HI during deceleration and Output Speed=Skip Speed LO during acceleration. Fig. 118 shows the function of skip speed hi and low.

Between Skip Speed HI and LO, the speed changes with the set acceleration and deceleration times. Skipspd1 LO sets the lower value for the 1st skip range.

344 SkipSpd 1 Lo	
Default:	0 rpm
Range:	0 - 4 x Motor Sync Speed

Communication information

Modbus Instance no/DeviceNet no:	43124
Profibus slot/index	169/28
EtherCAT and CANopen index (hex)	4c34
Profinet IO index	19508
Fieldbus format	Int, 1=1 rpm
Modbus format	Int, 1=1 rpm

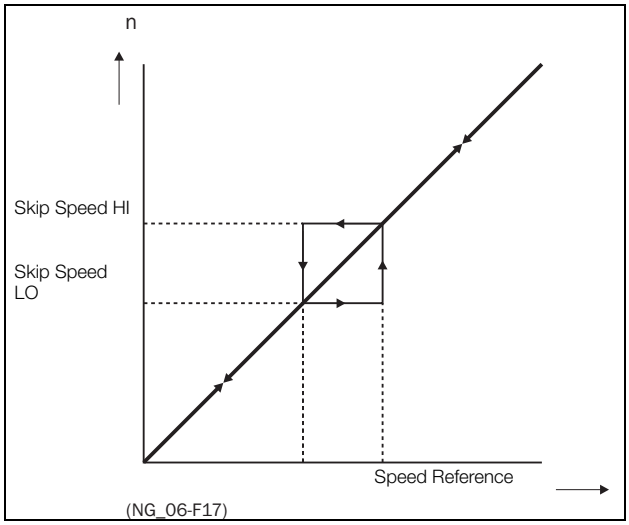

Fig. 118 Skip Speed

NOTE: The two Skip Speed ranges may be overlapped.

Skip Speed 1 High [345]

Skipspd1 HI sets the higher value for the 1st skip range.

345	SkipSpd 1 Hi
Default:	0 rpm
Range:	0 – 4 x Sync Speed

Communication information

Modbus Instance no/DeviceNet no:	43125
Profibus slot/index	169/29
EtherCAT and CANopen index (hex)	4c35
Profinet IO index	19509
Fieldbus format	Int, 1=1 rpm
Modbus format	Int, 1=1 rpm

Skip Speed 2 Low [346]

The same function as menu [344] for the 2nd skip range.

346	SkipSpd 2 Lo
Default:	0 rpm
Range:	0 – 4 x Motor Sync Speed

Communication information

Modbus Instance no/DeviceNet no:	43126
Profibus slot/index	169/30
EtherCAT and CANopen index (hex)	4c36
Profinet IO index	19510
Fieldbus format	Int, 1=1 rpm
Modbus format	Int, 1=1 rpm

Skip Speed 2 High [347]

The same function as menu [345] for the 2nd skip range.

347	SkipSpd 2 Hi
Default:	0 rpm
Range:	0 – 4 x Motor Sync Speed

Communication information

Modbus Instance no/DeviceNet no:	43127
Profibus slot/index	169/31
EtherCAT and CANopen index (hex)	4c37
Profinet IO index	19511
Fieldbus format	Int, 1=1 rpm
Modbus format	Int, 1=1 rpm

Jog Speed [348]

The Jog Speed function is activated by one of the digital inputs. The digital input must be set to the Jog function [520]. The Jog command/function will automatically generate a run command as long as the Jog command/ function is active. This is valid independent of settings in menu [215]. The rotation is determined by the polarity of the set Jog Speed.

Example

If Jog Speed = -10, this will give a Run Left command at 10 rpm regardless of RunL or RunR commands. Fig. 119 shows the function of the Jog command/function.

348	Jog Speed
Default:	50 rpm
Range:	-4 x motor sync speed to +4 x motor sync speed
Dependent on:	Defined motor sync speed. Max = 400%, normally max=AC drive I_{max}/motor I_{nom} x 100%.

NOTE: Speed signal is limited to < 32767.

Communication information

Modbus Instance no/DeviceNet no:	43128
Profibus slot/index	169/32
EtherCAT and CANopen index (hex)	4c38
Profinet IO index	19512
Fieldbus format	Int, 1=1 rpm
Modbus format	Int, 1=1 rpm

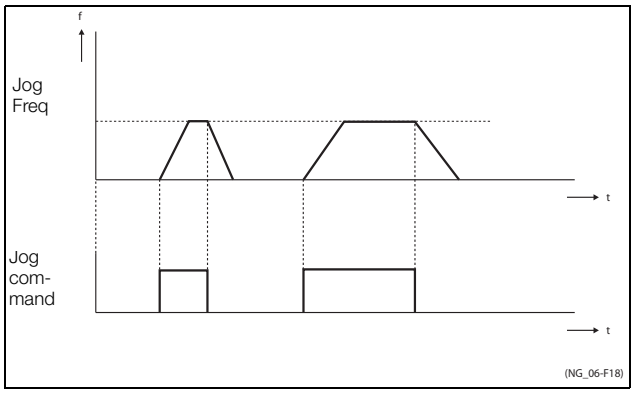

Fig. 119 Jog command

11.5.6 Droop Speed [349]

Speed drooping reduces the speed in proportion to the torque. This can be used for stationary load sharing between motors connected to the same load. The droop speed is the requested speed reduction at nominal torque. The droop speed is expressed in percent of nominal speed. The value needs to be tuned to the application. A good starting value is 5%. The ramp times in [33x] impact the dynamic behavior.

Speed [rpm] = Speed Ref [rpm] - Droop Speed [%] / 100 * Torque [%] / 100 * Nominal Speed [rpm]

349	Droop Speed
Default:	0% (means function is turned off)
Range:	0 - 20%

11.5.7 Torques [350]

Menu with all parameters for torque settings.

Maximum Torque [351]

Sets the maximum motor torque (according to menu group "Motor Data [220]"). This Maximum Torque operates as an upper torque limit. A Speed Reference is always necessary to run the motor.

$$T_{MOT}(Nm) = \frac{P_{MOT}(kw)x9550}{n_{MOT}(rpm)} = 100\%$$

351	Max Torque
Default:	120% calculated from the motor data
Range:	0–400%

Communication information

Modbus Instance no/DeviceNet no:	43141
Profibus slot/index	169/45
EtherCAT and CANopen index (hex)	4c45
Profinet IO index	19525
Fieldbus format	Long, 1=1%
Modbus format	EInt

NOTE: The Max Torque parameter will limit the maxmum output current of the AC drive following the relation: 100% Tmot corresponds to 100% Imot. The maximum possible setting for parameter 351 is limited by Inom/Imot x 120%, but not higher than 400%.

NOTE: The motor temperature increases very quickly due to extensive power losses.

IxR Compensation [352]

This function compensates for the drop in voltage over different resistances such as (very) long motor cables, chokes and motor stator by increasing the output voltage at a constant frequency. IxR Compensation is most important at low frequencies and is used to obtain a higher starting torque. The maximum voltage increase is 25% of the nominal output voltage. See Fig. 120.

Selecting "Automatic" will use the optimal value according to the internal model of motor. "User-Defined" can be selected when the start conditions of the application do not change and a high starting torque is always required. A fixed IxR Compensation value can be set in the menu [353].

352	IxR Comp	
Default:		Off
Off	0	Function disabled
Automatic	1	Automatic compensation
User Defined	2	User defined value in percent.

Communication information

Modbus Instance no/DeviceNet no:	43142
Profibus slot/index	169/46
EtherCAT and CANopen index (hex)	4c46
Profinet IO index	19526
Fieldbus format	UInt
Modbus format	UInt

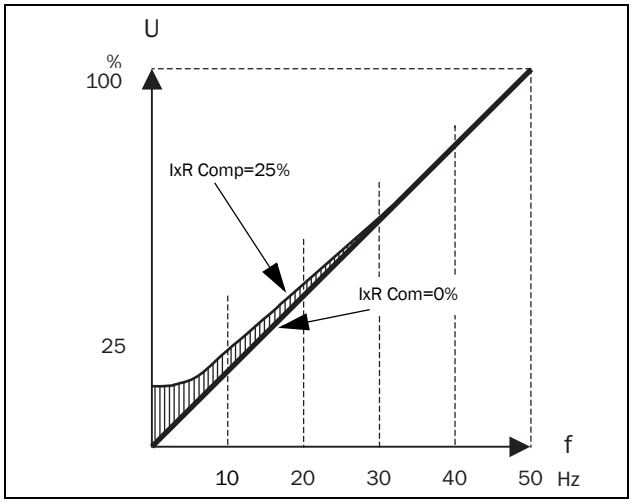

Fig. 120 IxR Comp at Linear V/Hz curve

IxR Comp_user [353]

Only visible if User-Defined is selected in previous menu.

353	IxR CompUsr
Default:	0.0%
Range:	0-25% x U_{NOM} (0.1% of resolution)

Communication information

Modbus Instance no/DeviceNet no:	43143
Profibus slot/index	169/47
EtherCAT and CANopen index (hex)	4c47
Profinet IO index	19527
Fieldbus format	Long, 1= 0.1 %
Modbus format	EInt

NOTE: A too high level of IxR Compensation could cause motor saturation. This can cause a "Power Fault" trip. The effect of IxR Compensation is stronger with higher power motors.

NOTE: The motor may be overheated at low speed. Therefore it is important that the Motor I^2t Current [232] is set correctly.

Flux Optimization [354]

Asynchronous motors

Flux Optimization for asynchronous motors reduces the energy consumption and the motor noise, at low or no load conditions. Flux Optimization automatically decreases the V/Hz ratio, depending on the actual load of the motor when the process is in a steady state. Fig. 121 shows the area within which the Flux Optimization is active.

Permanent magnet synchronous and synchronous reluctance motors

Flux optimization for permanent magnet synchronous motors and synchronous reluctance motors adjusts the V/Hz ratio, to either minimize the current or by predicting a suitable level based on the torque (and speed). Note that IxR compensation is needed for synchronous motors to get a good start, also when flux optimization is activated.

354 Flux optim		
Default:		Off
Off	0	Function disabled
On(Imin)	1	Flux controlled to minimize current
On (n, T)	2	Flux adjusted based on the torque
On (cos phi=1)	3	Flux controlled to minimize reactive power.

Communication information

Modbus Instance no/DeviceNet no:	43144
Profibus slot/index	169/48
EtherCAT and CANopen index (hex)	4c48
Profinet IO index	19528
Fieldbus format	UInt
Modbus format	UInt

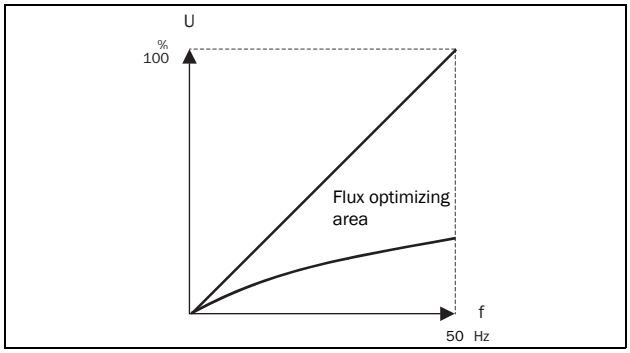

Fig. 121 Flux Optimizing

NOTE: Flux optimization works best at stable situations in slow changing processes.

Maximum power [355]

Sets maximum power. Can be used for limiting motor power in field weakening operation. This function operates as an upper power limit and internally limits the parameter "Max Torque [351]" according to :
Tlimit = Plimit[%] / (Actual Speed / Sync Speed)

355 Max Power		
Default:		Off
Off	0	Off. No power limit
1 - 400	1 - 400	1 - 400% of motor nominal power

NOTE: The maximum possible setting for parameter [355] is limited by I_{NOM}/I_{MOT} x 120%, but not higher than 400%.

Communication information

Modbus Instance no/DeviceNet no:	43145
Profibus slot/index	169/49
EtherCAT and CANopen index (hex)	4c49
Profinet IO index	19529
Fieldbus format	Long, 1=1%
Modbus format	EInt

11.5.8 Preset References [360]

Motor Potentiometer [361]

Sets the properties of the motor potentiometer function. See the parameter "DigIn1 [521]" for the selection of the motor potentiometer function.

361 Motor Pot		
Default:		Non Volatile
Volatile	0	After a stop, trip or power down, the AC drive will start always from zero speed (or minimum speed, if selected).
Non volatile	1	Non Volatile. After a stop, trip or power down of the AC drive, the reference value at the moment of the stop will be memorized. After a new start command the output speed will resume to this saved value.

Communication information

Modbus Instance no/DeviceNet no:	43131
Profibus slot/index	169/35
EtherCAT and CANopen index (hex)	4c3b
Profinet IO index	19515
Fieldbus format	UInt
Modbus format	UInt

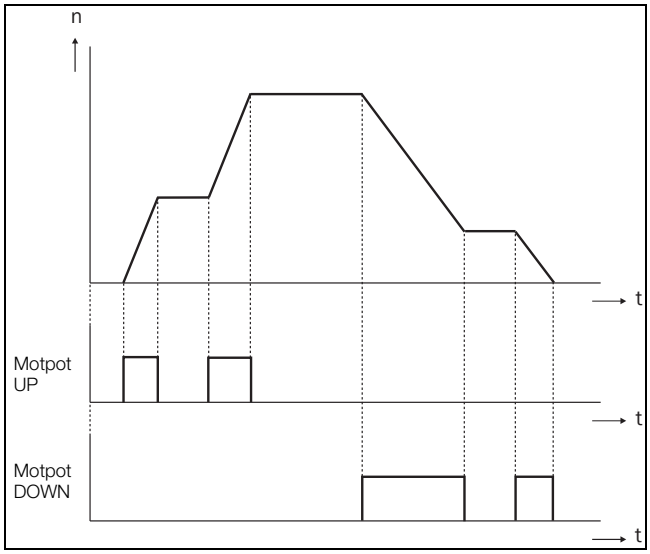

Fig. 122 MotPot function

Preset Ref 1 [362] to Preset Ref 7 [368]

Preset speeds have priority over the analogue inputs. Preset speeds are activated by the digital inputs. The digital inputs must be set to the function Pres. Ref 1, Pres. Ref 2 or Pres. Ref 4.

Depending on the number of digital inputs used, up to 7 preset speeds can be activated per parameter set. Using all the parameter sets, up to 28 preset speeds are possible.

362 Preset Ref 1	
Default:	Speed, 0 rpm
Dependent on:	Process Source [321] and Process Unit [322]
Speed mode	0 - max speed [343]
Torque mode	0 - max torque [351]
Other modes	Min according to menu [324] - max according to menu [325]

Communication information

Modbus Instance no/DeviceNet no:	43132–43138
Profibus slot/index	169/36–169/42
EtherCAT and CANopen index (hex)	4c3c - 4c42
Profinet IO index	19516 - 19522
Fieldbus format	Long, 1= 1 rpm, 1 %, 1°C or 0.001 if Process Value/Process Ref using a [322] unit
Modbus format	EInt

The same settings are valid for the menus:

"[363] Preset Ref 2", with default 250 rpm
"[364] Preset Ref 3", with default 500 rpm
"[365] Preset Ref 4", with default 750 rpm
"[366] Preset Ref 5", with default 1000 rpm
"[367] Preset Ref 6", with default 1250 rpm
"[368] Preset Ref 7", with default 1500 rpm

The selection of the presets is as in Table 37.

Table 37

Preset Ctrl3	Preset Ctrl2	Preset Ctrl1	Output Speed
0	0	0	Analogue reference
0	0	1[1)]	Preset Ref 1
0	1[1)]	0	Preset Ref 2
0	1	1	Preset Ref 3
1[1)]	0	0	Preset Ref 4
1	0	1	Preset Ref 5
1	1	0	Preset Ref 6
1	1	1	Preset Ref 7

[1)]= selected if only one preset reference is active
1 = active input
0 = non active input

NOTE: If only Preset Ctrl3 is active, then the Preset Ref 4 can be selected. If Presets Ctrl2 and 3 are active, then the Preset Ref 2, 4 and 6 can be selected.

Keyboard reference mode [369]

This parameter sets how the reference value [310] is edited.

369 Key Ref Mode		
Default:		MotPot
Normal	0	The reference value is edited as a normal parameter (the new reference value is activated when Enter is pressed after the value has been changed). The “Acc Time [331]” and “Dec Time [332]” are used.
MotPot	1	The reference value is edited using the motor potentiometer function (the new reference value is activated directly when the key + or - is pressed). The “Acc MotPot [333]” and “Dec MotPot [334]” are used.
MotPot+	2	This selection makes it possible to update the reference in “[310]” directly from the [100]-menu. Pressing +/- in the [100]-menu changes the menu to [310] and there you can continue to press +/- to update the reference. When no key has been pressed for a second the menu returns to [100] automatically.

Communication information

Modbus Instance no/DeviceNet no:	43139
Profibus slot/index	169/43
EtherCAT and CANopen index (hex)	4c43
Profinet IO index	19523
Fieldbus format	UInt
Modbus format	UInt

NOTE: When Key Ref Mode is set to MotPot, the reference value ramp times are according to the “Acc MotPot [333]” and “Dec MotPot [334]” settings. Actual speed ramp will be limited according to “Acc Time [331]” and “Dec Time [332]”.

11.5.9 PID Process Control [380]

The PID controller is used to control an external process via a feedback signal. The reference value can be set via analogue input AnIn1, at the Control Panel [310] by using a Preset Reference, or via serial communication. The feedback signal (actual value) must be connected to an analogue input that is set to the function Process Value.

Process PID Control [381]

This function enables the PID controller and defines the response to a changed feedback signal.

381 PID Control		
Default:		Off
Off	0	PID control deactivated.
On	1	The speed increases when the feedback value decreases. PID settings according to menus [381] to [385].
Invert	2	The speed decreases when the feedback value decreases. PID settings according to menus [383] to [385].

Communication information

Modbus Instance no/DeviceNet no:	43154
Profibus slot/index	169/58
EtherCAT and CANopen index (hex)	4c52
Profinet IO index	19538
Fieldbus format	UInt
Modbus format	UInt

PID P Gain [383]

Setting the P gain for the PID controller.

383 PID P Gain	
Default:	1.0
Range:	0.0–30.0

Communication information

Modbus Instance no/DeviceNet no:	43156
Profibus slot/index	169/60
EtherCAT and CANopen index (hex)	4c54
Profinet IO index	19540
Fieldbus format	Long, 1=0.1
Modbus format	EInt

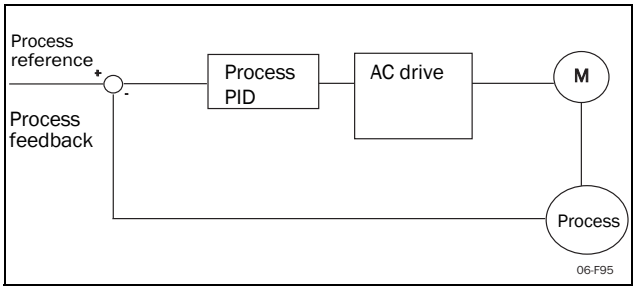

Fig. 123 Closed loop PID control

PID I Time [384]

Setting the integration time for the PID controller.

384	PID I Time
Default:	1.00 s
Range:	0.01–300 s

Communication information

Modbus Instance no/DeviceNet no:	43157
Profibus slot/index	169/61
EtherCAT and CANopen index (hex)	4c55
Profinet IO index	19541
Fieldbus format	Long, 1=0.01 s
Modbus format	EInt

Process PID D Time [385]

Setting the differentiation time for the PID controller.

385	PID D Time
Default:	0.00 s
Range:	0.00–30 s

Communication information

Modbus Instance no/DeviceNet no:	43158
Profibus slot/index	169/62
EtherCAT and CANopen index (hex)	4c56
Profinet IO index	19542
Fieldbus format	Long, 1=0.01 s
Modbus format	EInt

PID sleep functionality

This function is controlled via a wait delay and a separate wake-up margin condition. With this function it is possible to put the AC drive in "sleep mode" when the process value is at it's set point and the motor is running at minimum speed for the length of the time set in [386]. By going into sleep mode, the by the application consumed energy is reduced to a minimum. When the process feedback value goes below the set margin on the process reference as set in [387], the AC drive will wake up automatically and normal PID operation continues, see examples.

NOTE: When the drive is in Sleep mode, this is indicated with "slp" in the lower left corner of the display.

PID sleep when less than minimum speed [386]

If the PID output is equal to or less than minimum speed for given delay time, the AC drive will go to sleep.

386	PID<MinSpd
Default:	Off
Range:	Off, 0.01 –3600 s

Communication information

Modbus Instance no/DeviceNet no:	43371
Profibus slot/index	170/20
EtherCAT and CANopen index (hex)	4d2b
Profinet IO index	19755
Fieldbus format	Long, 1=0.01 s
Modbus format	EInt

NOTE: Menu [386] has higher priority than menu [342].

PID Activation Margin [387]

The PID activation (wake-up) margin is related to the process reference and sets the limit when the AC drive should wake-up/start again.

387	PID Act Marg
Default:	0
Range:	0 –10000 in Process unit

Communication information

Modbus Instance no/DeviceNet no:	43372
Profibus slot/index	170/21
EtherCAT and CANopen index (hex)	4d2c
Profinet IO index	19756
Fieldbus format	Long, 1= 1 rpm, 1 %, 1°C or 0.001 if Process Value/Process Ref using a [322] unit
Modbus format	EInt

NOTE: The margin is always a positive value.

Example 1 PID control = normal (flow or pressure control)

[321] = F (AnIn)
[322] = Bar
[310] = 20 Bar
[342] = 2 s (inactive since [386] is activated and have higher priority)
[381]= On
[386] = 10 s
[387] = 1 Bar

The AC drive will stop/sleep when the speed (PID output) is below or equal to Min Speed for 10 seconds. The AC drive will activate/wake up when the "Process value" goes below the PID Activation Margin which is related to the process reference, i.e. goes below (20-1) Bar. See Fig. 124.

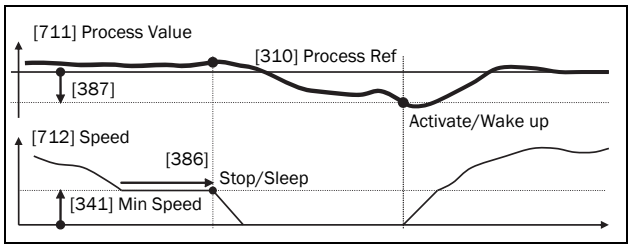

Fig. 124 PID Stop/sleep with normal PID

Example 2 PID control = inverted (tank level control)

[321] = F (AnIn)
[322] = m
[310] = 7 m
[342] = 2 s (inactive since [386] is activated and have higher priority)
[381]= Inverted
[386] = 30 s
[387] = 1 m

The AC drive will stop/sleep when the speed (PID output) is below or equal to Min Speed for 30 seconds. The AC drive will activate/wake up when the "Process value" goes above the PID Activation Margin which is related to the process reference, i.e. goes above (7+1) m. See Fig. 125.

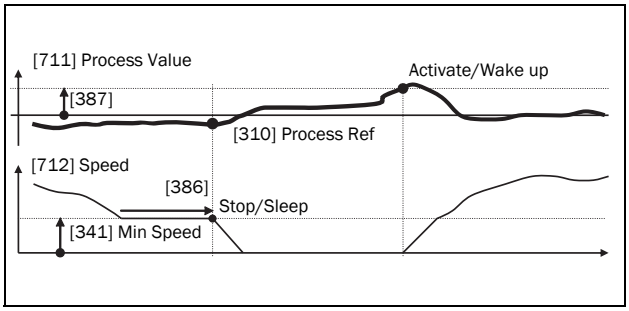

Fig. 125 PID Stop/sleep with inverted PID

PID Steady State Test [388]

In application situations where the feedback can become independent of the motor speed, this PID Steady Test function can be used to overrule the PID operation and force the AC drive to go in sleep mode i.e. the AC drive automatically reduces the output speed while at the same time ensures the process value.

Example: pressure controlled pump systems with low/no flow operation and where the process pressure has become independent of the pump speed, e.g. due to slowly closed valves. By going into Sleep mode, heating of the pump and motor will be avoided and no energy is spilled.

PID Steady state test delay.

NOTE: It is important that the system has reached a stable situation before the Steady State Test is initiated.

388	PID Stdy Tst
Default:	Off
Range:	Off, 0.01–3600 s

Communication information

Modbus Instance no/DeviceNet no:	43373
Profibus slot/index	170/22
EtherCAT and CANopen index (hex)	4d2d
Profinet IO index	19757
Fieldbus format	Long, 1=0.01 s
Modbus format	EInt

PID Steady State Margin [389]

PID steady state margin defines a margin band around the reference that defines “steady state operation”. During the steady state test the PID operation is overruled and the AC drive is decreasing the speed as long as the PID error is within the steady state margin. If the PID error goes outside the steady state margin the test failed and normal PID operation continues, see example.

389	PID Stdy Mar
Default:	0
Range:	0–10000 in process unit

Communication information

Modbus Instance no/DeviceNet no:	43374
Profibus slot/index	170/23
EtherCAT and CANopen index (hex)	4d2e
Profinet IO index	19758
Fieldbus format	Long, 1= 1 rpm, 1 %, 1°C or 0.001 if Process Value/ Process Ref using a [322] unit
Modbus format	EInt

Example: The PID Steady Test starts when the process value [711] is within the margin and Steady State Test Wait Delay has expired. The PID output will decrease speed with a step value which corresponds to the margin as long as the Process value [711] stays within steady state margin. When Min Speed [341] is reached the steady state test was successful and stop/sleep is commanded if PID sleep function [386]and [387] is activated. If the Process value [711] goes outside the set steady state margins then the test failed and normal PID operation will continue, see Fig. 126.

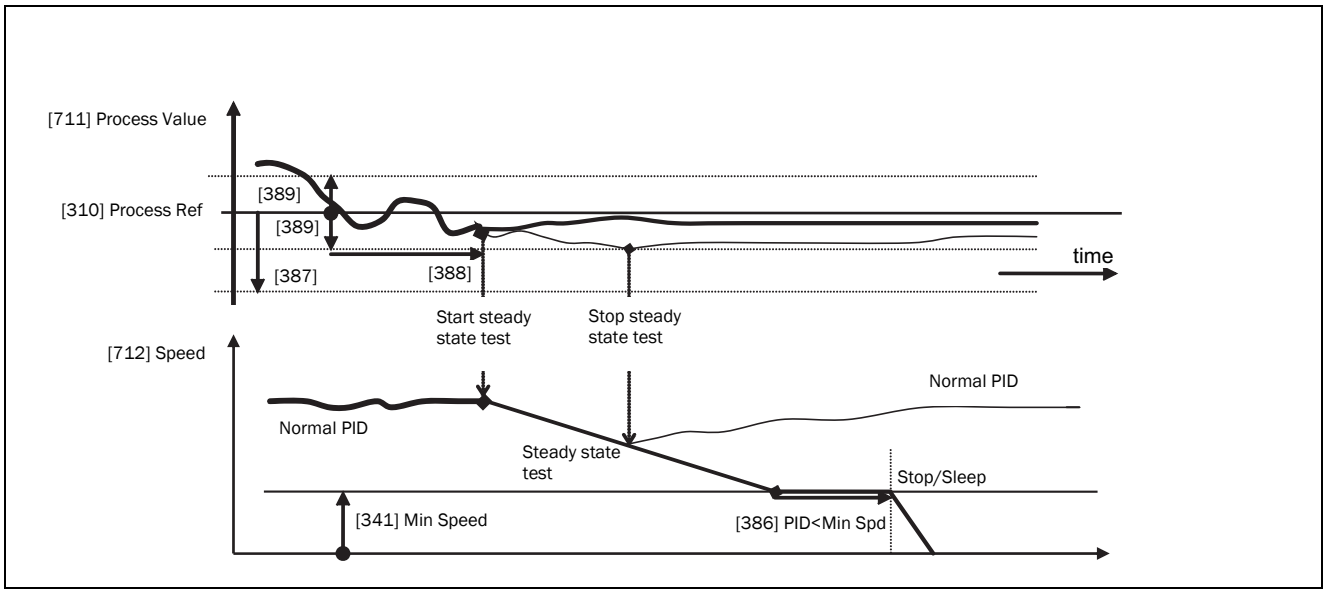

Fig. 126 Steady state test

11.5.10 Pump/Fan Control [390]

The Pump Control functions are in menu [390]. The function is used to control a number of drives (pumps, fans, etc.) of which one is always driven by the AC drive.

Pump enable [391]

This function will enable the pump control to set all relevant pump control functions.

391	Pump enable	
Default:		Off
Off	0	Pump control is switched off.
On	1	Pump control is on: - Pump control parameters [392] to [39G] appear and are activated according to default settings. - View functions [39H] to [39M] are added in the menu structure.

Communication information

Modbus Instance no/DeviceNet no:	43161
Profibus slot/index	169/65
EtherCAT and CANopen index (hex)	4c59
Profinet IO index	19545
Fieldbus format	UInt
Modbus format	UInt

Number of Drives [392]

Sets the total number of drives which are used, including the Master AC drive. The setting here depends on the parameter "Select Drive [393]". After the number of drives is chosen it is important to set the relays for the pump control. If the digital inputs are also used for status feedback, these must be set for the pump control according to; Pump 1 OK– Pump6 OK in menu [520].

392	No of Drives
Default:	2
1-3	Number of drives if I/O Board is not used.
1-6	Number of drives if 'Alternating MASTER' is used, see Select Drive [393]. (I/O Board is used.)
1-7	Number of drives if 'Fixed MASTER' is used, see Select Drive [393]. (I/O Board is used.)

NOTE: Used relays must be defined as Slave Pump or Master Pump. Used digital inputs must be defined as Pump Feedback.

Communication information

Modbus Instance no/DeviceNet no:	43162
Profibus slot/index	169/66
EtherCAT and CANopen index (hex)	4c5a
Fieldbus format	UInt
Modbus format	UInt

Select Drive [393]

Sets the main operation of the pump system. 'Sequence' and 'Runtime' are Fixed MASTER operation. 'All' means Alternating MASTER operation.

393	Select Drive	
Default:		Sequence
Sequence	0	Fixed MASTER operation: - The additional drives will be selected in sequence, i.e. first pump 1 then pump 2 etc. - A maximum of 7 drives can be used.
Run Time	1	Fixed MASTER operation: - The additional drives will be selected depending on the Run Time. So the drive with the lowest Run Time will be selected first. The Run Time is monitored in menus [39H] to [39M] in sequence. For each drive the Run Time can be reset. - When drives are stopped, the drive with the longest Run Time will be stopped first. - Maximum 7 drives can be used.
All	2	Alternating MASTER operation: - When the drive is powered up, one drive is selected as the Master drive. The selection criteria depends on the Change Condition [394]. The drive will be selected according to the Run Time. So the drive with the lowest Run Time will be selected first. The Run Time is monitored in menus [39H] to [39M] in sequence. For each drive the Run Time can be reset. - A maximum of 6 drives can be used.

Communication information

Modbus Instance no/DeviceNet no:	43163
Profibus slot/index	169/67
EtherCAT and CANopen index (hex)	4c5b
Profinet IO index	19547
Fieldbus format	UInt, 1=1
Modbus format	UInt

NOTE: This menu will NOT be active if only one drive is selected.

Change Condition [394]

This parameter determines the criteria for changing the master. This menu only appears if Alternating MASTER operation is selected. The elapsed run time of each drive is monitored. The elapsed run time always determines which drive will be the 'new' master drive.

This function is only active if the parameter “Select Drive [393]”= “All” is used.

394	Change Cond	
Default:		Both
Stop	0	The Runtime of the master drive determines when a master drive has to be changed. The change will only take place after a: - Power Up - Stop - Standby condition - Trip condition.
Timer	1	The master drive will be changed if the timer setting in Change Timer [395] has elapsed. The change will take place immediately. So during operation the additional pumps will be stopped temporarily, the 'new' master will be selected according to the Run Time and the additional pumps will be started again. It is possible to leave 2 pumps running during the change operation. This can be set with Drives on Change [396].
Both	2	The master drive will be changed if the timer setting in Change Timer [395] has elapsed. The 'new' master will be selected according to the elapsed Run Time. The change will only take place after a: - Power Up - Stop - Standby condition. - Trip condition.

Communication information

Modbus Instance no/DeviceNet no:	43164
Profibus slot/index	169/68
EtherCAT and CANopen index (hex)	4c5c
Profinet IO index	19548
Fieldbus format	UInt
Modbus format	UInt

NOTE: If the Status feedback inputs (DigIn 9 to Digin 14) are used, the master drive will be changed immediately if the feedback generates an 'Error'.

Change Timer [395]

When the time set here is elapsed, the master drive will be changed. This function is only active if “Select Drive [393]”=All and “Change Cond [394]”= Timer/ Both.

395	Change Timer
Default:	50 h
Range:	1-3000 h

Communication information

Modbus Instance no/DeviceNet no:	43165
Profibus slot/index	169/69
EtherCAT and CANopen index (hex)	4c5d
Profinet IO index	19549
Fieldbus format	UInt, 1=1 h
Modbus format	UInt, 1=1 h

Drives on Change [396]

If a master drive is changed according to the timer function (Change Condition=Timer/Both [394]), it is possible to leave additional pumps running during the change operation. With this function the change operation will be as smooth as possible. The maximum number to be programmed in this menu depends on the number of additional drives.

Example:

If the number of drives is set to 6, the maximum value will be 4. This function is only active if “Select Drive [393]”=All.

396	Drives on Ch
Default:	0
Range:	0 to (the number of drives - 2)

Communication information

Modbus Instance no/DeviceNet no:	43166
Profibus slot/index	169/70
EtherCAT and CANopen index (hex)	4c5e
Profinet IO index	19550
Fieldbus format	UInt
Modbus format	UInt

Upper Band [397]

If the speed of the master drive comes into the upper band, an additional drive will be added after a delay time that is set in “Start delay [399]”.

397 Upper Band	
Default:	10%
Range:	0-100% of total min speed to max speed

Communication information

Modbus Instance no/DeviceNet no:	43167
Profibus slot/index	169/71
EtherCAT and CANopen index (hex)	4c5f
Profinet IO index	19551
Fieldbus format	Long, 1=1%
Modbus format	EInt

Example:

Max Speed = 1500 rpm
Min Speed = 300 rpm
Upper Band = 10%

Start delay will be activated:
Range = Max Speed to Min Speed = 1500–300 = 1200 rpm

10% of 1200 rpm = 120 rpm

Start level = 1500–120 = 1380 rpm

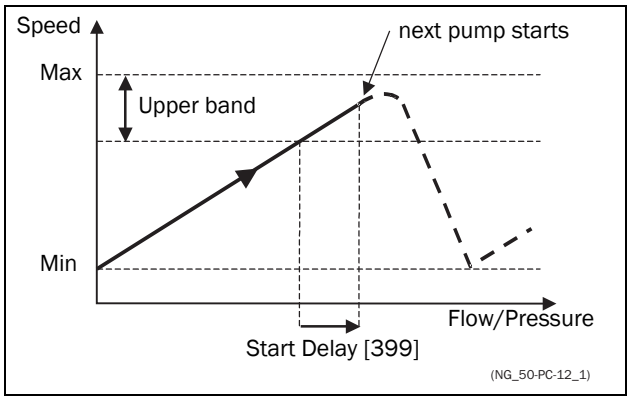

Fig. 127 Upper band

Lower Band [398]

If the speed of the master drive comes into the lower band an additional drive will be stopped after a delay time. This delay time is set in the parameter “Stop Delay [39A]”.

398 Lower Band	
Default:	10%
Range:	0-100% of total min speed to max speed

Communication information

Modbus Instance no/DeviceNet no:	43168
Profibus slot/index	169/72
EtherCAT and CANopen index (hex)	4c60
Profinet IO index	19552
Fieldbus format	Long, 1=1%
Modbus format	EInt

Example:

Max Speed = 1500 rpm
Min Speed = 300 rpm
Lower Band = 10%

Stop delay will be activated:
Range = Max Speed - Min Speed = 1500–300 = 1200 rpm

10% of 1200 rpm = 120 rpm

Start level = 300 + 120 = 420 rpm

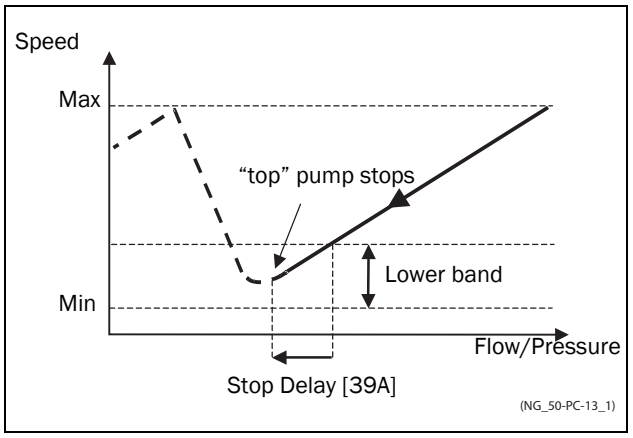

Fig. 128 Lower band

Start Delay [399]

This delay time must have elapsed before the next pump is started. A delay time prevents the nervous switching of pumps.

399	Start Delay
Default:	0 s
Range:	0-999 s

Communication information

Modbus Instance no/DeviceNet no:	43169
Profibus slot/index	169/73
EtherCAT and CANopen index (hex)	4c61
Profinet IO index	19553
Fieldbus format	Long, 1=1s
Modbus format	EInt

Stop Delay [39A]

This delay time must have elapsed before the 'top' pump is stopped. A delay time prevents the nervous switching of pumps.

39A	Stop Delay
Default:	0 s
Range:	0-999 s

Communication information

Modbus Instance no/DeviceNet no:	43170
Profibus slot/index	169/74
EtherCAT and CANopen index (hex)	4c62
Profinet IO index	19554
Fieldbus format	Long, 1=1 s
Modbus format	EInt

Upper Band Limit [39B]

If the speed of the pump reaches the upper band limit, the next pump is started immediately without delay. If a start delay is used this delay will be ignored. Range is between 0%, equalling max speed, and the set percentage for the "UpperBand [397]".

39B	Upp Band Lim
Default:	0%
Range:	0 to Upper Band level. 0% (=max speed) means that the Limit function is switched off.

Communication information

Modbus Instance no/DeviceNet no:	43171
Profibus slot/index	169/75
EtherCAT and CANopen index (hex)	4c63
Profinet IO index	19555
Fieldbus format	Long, 1=1%
Modbus format	EInt

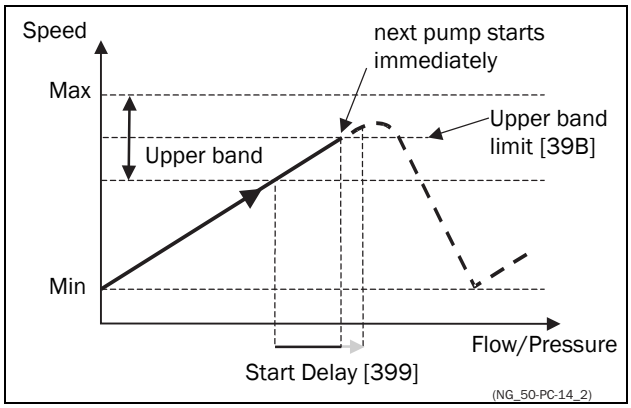

Fig. 129 Upper band limit

Lower Band Limit [39C]

If the speed of the pump reaches the lower band limit, the 'top' pump is stopped immediately without delay. If a stop delay is used this delay will be ignored. Range is from 0%, equalling min speed, to the set percentage for the “Lower Band [398]”.

39C	Low Band Lim
Default:	0%
Range:	0 to Lower Band level. 0% (=min speed) means that he Limit function is switched off.

Communication information

Modbus Instance no/DeviceNet no:	43172
Profibus slot/index	169/76
EtherCAT and CANopen index (hex)	4c64
Profinet IO index	19556
Fieldbus format	Long, 1=1%
Modbus format	EInt

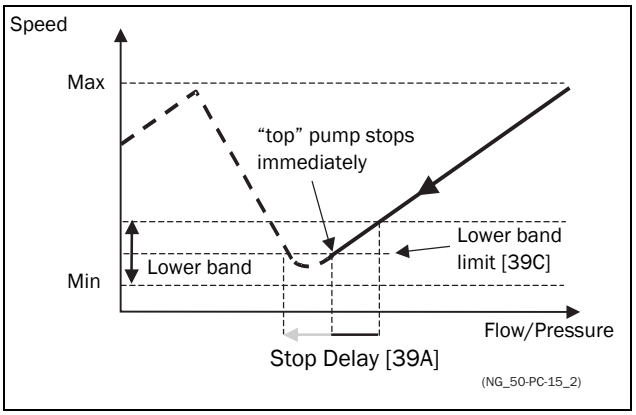

Fig. 130 Lower band limit

Settle Time Start [39D]

The settle start allows the process to settle after a pump is switched on before the pump control continues. If an additional pump is started D.O.L. (Direct On Line) or Y/Δ, the flow or pressure can still fluctuate due to the 'rough' start/stop method. This could cause unnecessary starting and stopping of additional pumps.

During the Settle start:

- PID controller is off.
- The speed is kept at a fixed level after adding a pump.

39D	Settle Start
Default:	0 s
Range:	0-999 s

Communication information

Modbus Instance no/DeviceNet no:	43173
Profibus slot/index	169/77
EtherCAT and CANopen index (hex)	4c65
Profinet IO index	19557
Fieldbus format	Long, 1=1 s
Modbus format	EInt

Transition Speed Start [39E]

The transition speed start is used to minimize a flow/pressure overshoot when adding another pump. When an additional pump needs to be switched on, the master pump will slow down to the set transition speed start value, before the additional pump is started. The setting depends on the dynamics of both the master drive and the additional drives.

The transition speed is best set by trial and error.

In general:

- If the additional pump has 'slow' start/stop dynamics, then a higher transition speed should be used.
- If the additional pump has 'fast' start/stop dynamics, then a lower transition speed should be used.

39E	TransS Start
Default:	60%
Range:	0-100% of total min speed to max speed

Communication information

Modbus Instance no/DeviceNet no:	43174
Profibus slot/index	169/78
EtherCAT and CANopen index (hex)	4c66
Profinet IO index	19558
Fieldbus format	Long, 1=1%
Modbus format	EInt

NOTE: If set to 100 %, the transition speed, when starting pumps, is ignored and no speed adaption is made.
I.e. the slave pump is started directly and speed of the master pump is maintained.

Example

Max Speed = 1500 rpm
Min Speed = 200 rpm
TransS Start = 60%

When an additional pump is needed, the speed will be controlled down to min speed + (60% x (1500 rpm - 200 rpm)) = 200 rpm + 780 rpm = 980 rpm. When this speed is reached, the additional pump with the lowest run time hours will be switched on.

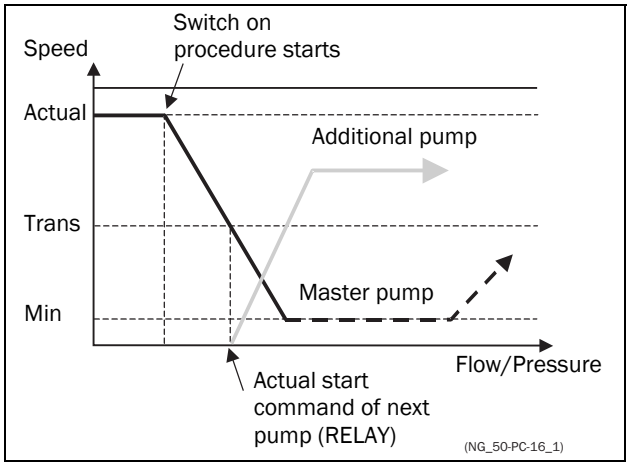

Fig. 131 Transition speed start

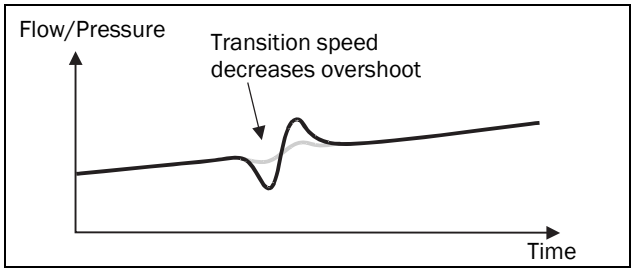

Fig. 132 Effect of transition speed

Settle Time Stop [39F]

The settle stop allows the process to settle after a pump is switched off before the pump control continues. If an additional pump is stopped D.O.L. (Direct On Line) or Y/Δ, the flow or pressure can still fluctuate due to the 'rough' start/stop method. This could cause unnecessary starting and stopping of additional pumps.

During the Settle stop:

- PID controller is off.
- the speed is kept at a fixed level after stopping a pump

39F Settle Stop	
Default:	0 s
Range:	0–999 s

Communication information

Modbus Instance no/DeviceNet no:	43175
Profibus slot/index	169/79
EtherCAT and CANopen index (hex)	4c67
Profinet IO index	19559
Fieldbus format	Long, 1=1 s
Modbus format	Elnt

Transition Speed Stop [39G]

The transition speed stop is used to minimize a flow/pressure overshoot when shutting down an additional pump. The setting depends on the dynamics of both the master drive and the additional drives.

In general:

- If the additional pump has 'slow' start/stop dynamics, then a higher transition speed should be used.
- If the additional pump has 'fast' start/stop dynamics, then a lower transition speed should be used.

39G TransS Stop	
Default:	60%
Range:	0-100% of total min speed to max speed

Communication information

Modbus Instance no/DeviceNet no:	43176
Profibus slot/index	169/80
EtherCAT and CANopen index (hex)	4c68
Profinet IO index	19560
Fieldbus format	Long, 1=1%
Modbus format	Elnt

NOTE: If set to 0 %, the transition speed when stopping pumps, is ignored and no speed adaption is made.
I.e. the slave pump is stopped directly and speed of the master pump is continued.

Example

Max Speed = 1500 rpm
Min Speed = 200 rpm
TransS Start = 60%

When less additional pumps are needed, the speed will be controlled up to min speed + (60% x (1500 rpm - 200 rpm)) = 200 rpm + 780 rpm = 980 rpm. When this speed is reached, the additional pump with the highest run time hours will be switched off.

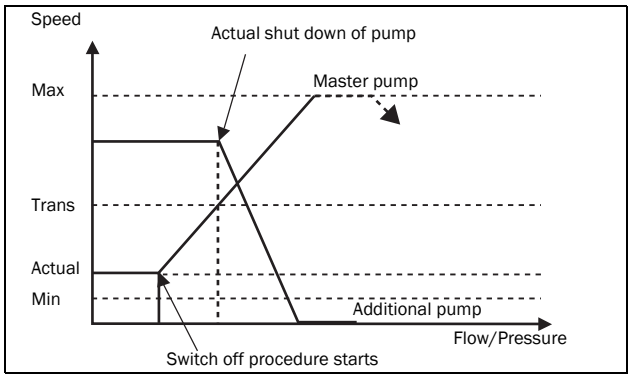

Fig. 133 Transition speed stop

Run Times 1-6 [39H] to [39M]

39H Run Time 1	
Unit:	h:mm:ss (hours:minutes:seconds)
Range:	0:00:00–262143:59:59

Communication information

Modbus Instance no/ DeviceNet no:	31051 : 31052 : 31053(hr:min:sec) 31054 : 31055: 31056(hr:min:sec) 31057 : 31058: 31059(hr:min:sec) 31060 : 31061: 31062(hr:min:sec) 31063 : 31064: 31065(hr:min:sec) 31066 : 31067: 31068(hr:min:sec)
Profibus slot/index	121/195, 121/196, 121/197, 121/198, 121/199, 121/200, 121/201, 121/202, 121/203, 121/204, 121/205, 121/206, 121/207, 121/208, 121/209, 121/210, 121/211, 121/212
EtherCAT and CANopeniindex (hex)	241b : 241c : 241d 241e : 241f : 2420 2421 : 2422 : 2423 2424 : 2425 : 2426 2427 : 2428 : 2429 242a : 242b : 242c
Profinet IO index	1051:1052:1053 - 1068
Fieldbus format	Long, 1=1h/m/s
Modbus format	EInt

Reset Run Times 1-6 [39H1] to [39M1]

39H1 Rst Run Tm1		
Default:		No
No	0	
Yes	1	

Communication information

Modbus Instance no/DeviceNet no:	38–43, pump 1 -6
Profibus slot/index	0/37–0/42
EtherCAT and CANopen index (hex)	2026 - 202b
Profinet IO index	38 - 43
Fieldbus format	UInt
Modbus format	UInt

Pump Status [39N]

39N	Pump 123456
Indication	**Description**
C	Control, master pump, only when alternating master is used
D	Direct control
O	Pump is off
E	Pump error

Communication information

Modbus Instance no/DeviceNet no:	31069
Profibus slot/index	121/213
EtherCAT and CANopen index (hex)	242d
Profinet IO index	1069
Fieldbus format	UInt
Modbus format	UInt

Number backup/reserve [39P]

Sets the number of pumps used for backup/reserve which in normal conditions can not be selected. This function can be used for increasing redundancy in the pump system by having pumps in reserve that can be activated when some pumps indicate fault or are shut off for maintenance.

39P No of Backup	
Default:	0
Range:	0-3

Communication information

Modbus Instance no/DeviceNet no:	43177
Profibus slot/index	169/81
EtherCAT and CANopen index (hex)	4c69
Profinet IO index	19561
Fieldbus format	UInt
Modbus format	UInt

11.6 Load Monitor and Process Protection [400]

11.6.1 Load Monitor [410]

The monitor functions enable the AC drive to be used as a load monitor. Load monitors are used to protect machines and processes against mechanical overload and underload, e.g. a conveyer belt or screw conveyer jamming, belt failure on a fan and a pump dry running. See explanation in Chapter 7.5 page 67.

Alarm Select [411]

Selects the types of alarms that are active.

411 Alarm Select		
Default:		Off
Off	0	No alarm functions active.
Min	1	Min Alarm active. The alarm output functions as an underload alarm.
Max	2	Max Alarm active. The alarm output functions as an overload alarm.
Min+Max	3	Both Min and Max alarm are active. The alarm outputs function as overload and underload alarms.

Communication information

Modbus Instance no/DeviceNet no:	43321
Profibus slot/index	169/225
EtherCAT and CANopen index (hex)	4cf9
Profinet IO index	19705
Fieldbus format	UInt
Modbus format	UInt

Alarm Trip [412]

Selects which alarm must cause a trip to the AC drive.

412 Alarm trip	
Default:	Off
Selection:	Same as in menu [411]

Communication information

Modbus Instance no/DeviceNet no:	43322
Profibus slot/index	169/226
EtherCAT and CANopen index (hex)	4cfa
Profinet IO index	19706
Fieldbus format	UInt
Modbus format	UInt

Ramp Alarm [413]

This function inhibits the (pre) alarm signals during acceleration/deceleration of the motor to avoid false alarms.

413 Ramp Alarm		
Default:		Off
Off	0	(Pre) alarms are inhibited during acceleration/deceleration.
On	1	(Pre) alarms active during acceleration/ deceleration.

Communication information

Modbus Instance no/DeviceNet no:	43323
Profibus slot/index	169/227
EtherCAT and CANopen index (hex)	4cfb
Profinet IO index	19707
Fieldbus format	UInt
Modbus format	UInt

Alarm Start Delay [414]

This parameter is used if, for example, you want to override an alarm during the start-up procedure.

Sets the delay time after a run command, after which the alarm may be given.

- If Ramp Alarm=On. The start delay begins after a RUN command.
- If Ramp Alarm=Off. The start delay begins after the acceleration ramp.

414 Start Delay	
Default:	2 s
Range:	0-3600 s

Communication information

Modbus Instance no/DeviceNet no:	43324
Profibus slot/index	169/228
EtherCAT and CANopen index (hex)	4cfc
Profinet IO index	19708
Fieldbus format	Long, 1=1 s
Modbus format	EInt

Load Type [415]

In this menu you select monitor type according to the load characteristic of your application. By selecting the required monitor type, the overload and underload alarm function can be optimized according to the load characteristic.

When the application has a constant load over the whole speed range, i.e. extruder or screw compressor, the load type can be set to basic. This type uses a single value as a reference for the nominal load. This value is used for the complete speed range of the AC drive. The value can be set or automatically measured. See Autoset Alarm [41A] and "Normal Load [41B]" about setting the nominal load reference.

The Load Curve mode uses an interpolated curve with 9 load values at 8 equal speed intervals. This curve is populated by a test run with a real load. This can be used with any smooth load curve including constant load.

The Load Curve R is a relative load curve in % of Load set in the Load Curve . There is also a minimum margine set in menu "Minimum Absolute Margin [41D]".

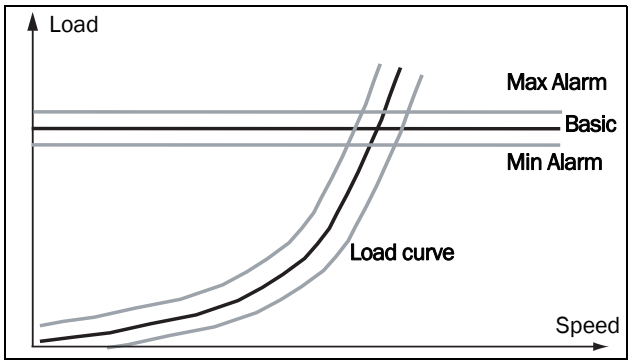

Fig. 134 Basic load type and Load curve

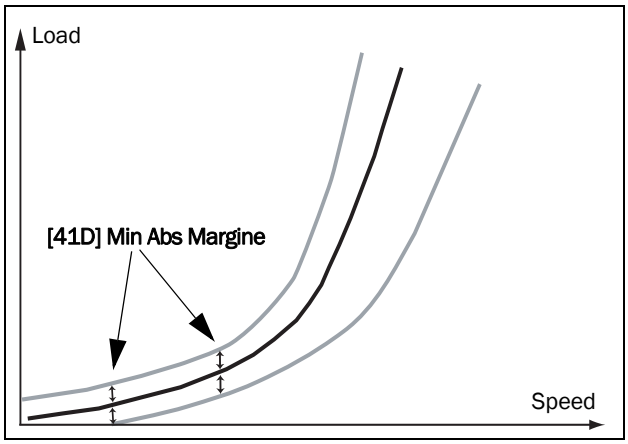

Fig. 135 Load Curve R with Min ABS margin.

415 Load Type		
Default:		Basic
Basic	0	Uses a fixed maximum and minimum load level over the full speed range. Can be used in situations where the torque is independent of the speed.
Load Curve	1	Uses the measured actual load characteristic of the process over the speed range.
Load Curv R	2	Uses a relative load margin with a minimum margin set in menu [41D].

Communication information

Modbus Instance no/DeviceNet no:	43325
Profibus slot/index	169/229
EtherCAT and CANopen index (hex)	4cfd
Profinet IO index	19709
Fieldbus format	UInt
Modbus format	UInt

Max Alarm [416]

Max Alarm Margin [4161]

With load type Basic, [415], used the Max Alarm Margin sets the band above the "Normal Load [41B]" menu that does not generate an alarm. With load type Load Curve [415] used, the Max Alarm Margin sets the band above the Load Curve [41C], that does not generate an alarm. The Max Alarm Margin is a percentage of nominal motor torque.
In case of Load Curve R, the margin is percentage of Load curve torque at the actual speed.

4161 MaxAlarmMar	
Default:	15%
Range:	0–400%

Communication information

Modbus Instance no/DeviceNet no:	43326
Profibus slot/index	169/230
EtherCAT and CANopen index (hex)	4cfe
Profinet IO index	19710
Fieldbus format	Long, 1=1%
Modbus format	Eint

Max Alarm delay [4162]

When the load level without interruption exceeds the alarm level longer than set “Max Alarm delay” time, an alarm is activated.

4162	MaxAlarmDel
Default:	0.1 s
Range:	0-90 s

Communication information

Modbus Instance no/DeviceNet no:	43330
Profibus slot/index	169/234
EtherCAT and CANopen index (hex)	4d02
Profinet IO index	19714
Fieldbus format	Long, 1=0.1 s
Modbus format	EInt

Max Pre Alarm delay [4172]

When the load level without interruption exceeds the alarm level longer than set “Max PreAlarm delay” time, a warning is activated.

4172	MaxPreAlDel
Default:	0.1 s
Range:	0–90 s

Communication information

Modbus Instance no/DeviceNet no:	43331
Profibus slot/index	169/235
EtherCAT and CANopen index (hex)	4d03
Profinet IO index	19715
Fieldbus format	Long, 1=0.1 s
Modbus format	EInt

Max Pre Alarm [417]

Max Pre AlarmMargin [4171]

With load type Basic [415], used the Max Pre-Alarm Margin sets the band above the Normal Load, [41B], menu that does not generate a pre-alarm. With load type Load Curve, [415], used the Max Pre-Alarm Margin sets the band above the Load Curve, [41C], that does not generate a pre-alarm. The Max Pre-Alarm Margin is a percentage of nominal motor torque.
In case of Load Curve R, the margin is percentage of Load curve torque at the actual speed.

4171	MaxPreAlMar
Default:	10%
Range:	0–400%

Communication information

Modbus Instance no/DeviceNet no:	43327
Profibus slot/index	169/231
EtherCAT and CANopen index (hex)	4cff
Profinet IO index	19711
Fieldbus format	Long, 1=1%
Modbus format	EInt

Min Pre Alarm [418]

Min Pre Alarm Margin [4181]

With load type Basic, [415], used the Min Pre-Alarm Margin sets the band under the Normal Load, [41B], menu that does not generate a pre-alarm. With load type Load Curve, [415], used the Min Pre-Alarm Margin sets the band under the Load Curve, [41C], that does not generate a pre-alarm. The Min Pre-Alarm Margin is a percentage of nominal motor torque.
In case of Load Curve R, the margin is percentage of Load curve torque at the actual speed.

4181	MinPreAlMar
Default:	10%
Range:	0-400%

Communication information

Modbus Instance no/DeviceNet no:	43328
Profibus slot/index	169/232
EtherCAT and CANopen index (hex)	4d00
Profinet IO index	19712
Fieldbus format	Long, 1=1%
Modbus format	EInt

Min Pre Alarm Response delay [4182]

When the load level without interruption is below the alarm level longer than set “Min PreAlarm delay” time, a warning is activated.

4182	MinPreAlDel
Default:	0.1 s
Range:	0-90 s

Communication information

Modbus Instance no/DeviceNet no:	43332
Profibus slot/index	169/236
EtherCAT and CANopen index (hex)	4d04
Profinet IO index	19716
Fieldbus format	Long, 1=0.1 s
Modbus format	EInt

Min Alarm [419]

Min Alarm Margin [4191]

With load type Basic, [415], used the Min Alarm Margin sets the band under the “Normal Load [41B]”, menu that does not generate an alarm. With load type “Load Curve [415]”, used the Min Alarm Margin sets the band under the “Load Curve [41C]”, that does not generate an alarm. The Max Alarm Margin is a percentage of nominal motor torque.
In case of Load Curve R, the margin is percentage of Load curve torque at the actual speed.

4191	MinAlarmMar
Default:	15%
Range:	0-400%

Communication information

Modbus Instance no/DeviceNet no:	43329
Profibus slot/index	169/233
EtherCAT and CANopen index (hex)	4d01
Profinet IO index	19713
Fieldbus format	Long, 1=1%
Modbus format	EInt

Min Alarm Response delay [4192]

When the load level without interruption is below the alarm level longer than set “Min Alarm delay” time, an alarm is activated.

4192	MinAlarmDel
Default:	0.1 s
Range:	0-90 s

Communication information

Modbus Instance no/DeviceNet no:	43333
Profibus slot/index	169/237
EtherCAT and CANopen index (hex)	4d05
Profinet IO index	19717
Fieldbus format	Long, 1=0.1 s
Modbus format	EInt

Autoset Alarm [41A]

The Autoset Alarm function can measure the nominal load that is used as reference for the alarm levels. If the selected “Load Type [415]” is Basic it copies the load the motor is running with to the menu “Normal Load [41B]”. The motor must run on the speed that generates the load that needs to be recorded. If the selected “Load Type [415]” is Load Curve it performs a test-run and populates the “Load Curve [41C]” with the found load values.

WARNING!
When autoset does a test run the motor and application/machine will ramp up to maximum speed.

NOTE: The motor must be running for the Autoset Alarm function to succeed. A not running motor generates a “Failed!” message.

41A	AutoSet Alrm	
Default:		No
No	0	
Yes	1	

Communication information

Modbus Instance no/DeviceNet no:	43334
Profibus slot/index	169/238
EtherCAT and CANopen index (hex)	4d06
Profinet IO index	19718
Fieldbus format	UInt
Modbus format	UInt

The default set levels for the (pre)alarms are:

Overload	Max Alarm	menu [4161] + [41B]
	Max Pre Alarm	menu [4171] + [41B]
Underload	Min Pre Alarm	menu [41B] - [4181]
	Min Alarm	menu [41B] - [4191]

These default set levels can be manually changed in menus [416] to [419]. After execution the message “Autoset OK!” is displayed for 1s and the selection reverts to “No”.

Normal Load [41B]

Set the level of the normal load. The alarm or pre alarm will be activated when the load is above/under normal load ± margin.

41B	Normal Load
Default:	100%
Range:	0-400% of max torque

NOTE: 100% Torque means: I_{NOM}= I_{MOT}. The maximum depends on the motor current and AC drive max current settings, but the absolute maximum adjustment is 400%.

Communication information

Modbus Instance no/DeviceNet no:	43335
Profibus slot/index	169/239
EtherCAT and CANopen index (hex)	4d07
Profinet IO index	19719
Fieldbus format	Long, 1=1%
Modbus format	Elnt

Load Curve [41C]

The load curve function can be used with any smooth load curve. The curve can be populated with a test-run or the values can be entered or changed manually.

Load Curve 1-9 [41C1]-[41C9]

The measured load curve is based on 9 stored samples. The curve starts at minimum speed and ends at maximum speed, the range in between is divided into 8 equal steps. The measured values of each sample are displayed in [41C1] to [41C9] and can be adapted manually. The value of the 1st sampled value on the load curve is displayed.

41C1	Load Curve1
Default:	100%
Range:	0–400% of max torque

Communication information

Modbus Instance no/DeviceNet no:	43336%, 43337 rpm, 43338 %, 43339 rpm, 43340 %, 43341 rpm, 43342 %, 43343 rpm, 43344 %, 43345 rpm, 43346 %, 43347 rpm, 43348 %, 43349 rpm, 43350 %, 43351 rpm, 43352 %, 43353 rpm
Profibus slot/index	169/240, 169/242, 169/244, 169/246, 169/248, 169/250, 169/252, 169/254, 170/1
EtherCAT and CANopen index (hex)	4d08 %, 4d09 rpm, 4d0a %, 4d0b rpm, 4d0c %, 4d0d rpm, 4d0e %, 4d0f rpm, 4d10 %, 4d11 rpm, 4d12 %, 4d13 rpm, 4d14 %, 4d15 rpm, 4d16 %, 4d17 rpm, 4d18 %, 4d19 rpm
Profinet IO index	19720 %, 19721 rpm, 19722 %, 19723 rpm, 19724 %, 19725 rpm, 19726 %, 19727 rpm, 19728 %, 19729 rpm, 19730 %, 19731 rpm, 19732 %, 19733 rpm, 19734 %, 19735 rpm, 19736 %, 19738 rpm,
Fieldbus format	Long, 1= 1 %, Int 1=1 rpm
Modbus format	Elnt

NOTE: The speed values depend on the Min- and Max Speed values. they are read only and cannot be changed.

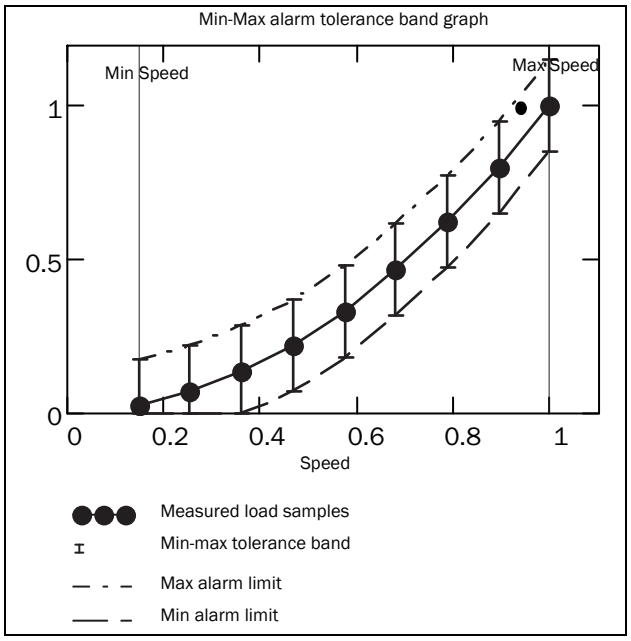

Fig. 136

Minimum Absolute Margin [41D]

This menu is displayed when using “Load Curve R”
Set absolute minimum margin of the Load Curve in % of nominal motor torque.

41D	MinAbsMarg
Default:	3 %
Range:	0 - 31 %

Communication information

Modbus Instance no/DeviceNet no:	43354
Profibus slot/index	170/3
EtherCAT and CANopen index (hex)	4d1a
Profinet IO index	19738
Fieldbus format	Long, 1 = 1%
Modbus format	EInt

11.6.2 Process Protection [420]

Submenu with settings regarding protection functions for the AC drive and the motor.

Low Voltage Override [421]

If a dip in the mains supply occurs and the low voltage override function is enabled, the AC drive will automatically decrease the motor speed to keep control of the application and prevent an under voltage trip until the input voltage rises again. Therefore the rotating energy in the motor/load is used to keep the DC link voltage level at the override level, for as long as possible or until the motor comes to a standstill. This is dependent on the inertia of the motor/load combination and the load of the motor at the time the dip occurs, see Fig. 137.

421	Low Volt OR	
Default:		On
Off	0	At a voltage dip the low voltage trip will protect.
On	1	At mains dip, AC drive ramps down until voltage rises.

Communication information

Modbus Instance no/DeviceNet no:	43361
Profibus slot/index	170/10
EtherCAT and CANopen index (hex)	4d21
Profinet IO index	19745
Fieldbus format	UInt
Modbus format	UInt

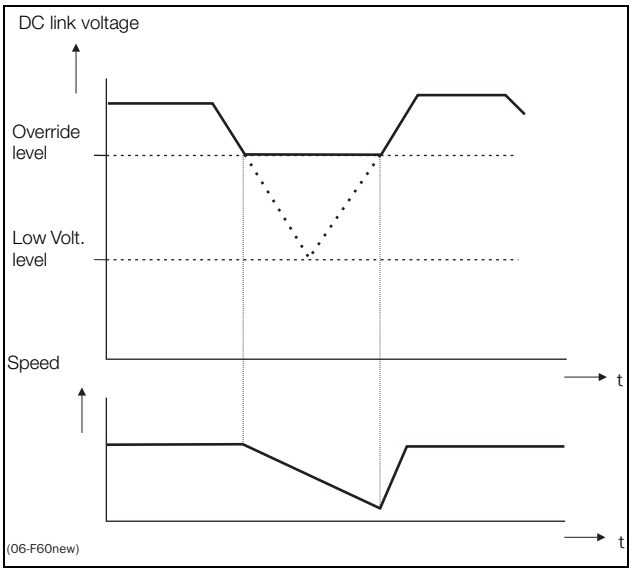

Fig. 137 Low voltage override

NOTE: During the low voltage override the LED trip/ limit blinks.

NOTE: LVO and OVC are not active in torque mode.

Rotor locked [422]

With the rotor locked function enabled, the AC drive will protect the motor and application when this is stalled whilst increasing the motor speed from standstill. This protection will coast the motor to stop and indicate a fault when the Torque Limit has been active at very low speed for more than 5 seconds.

422 Rotor locked		
Default:		Off
Off	0	No detection
On	1	AC drive will trip when locked rotor is detected. Trip message “Locked Rotor”.

Communication information

Modbus Instance no/DeviceNet no:	43362
Profibus slot/index	170/11
EtherCAT and CANopen index (hex)	4d22
Profinet IO index	19746
Fieldbus format	UInt
Modbus format	UInt

Motor lost [423]

With the motor lost function enabled, the AC drive is able to detect a fault in the motor circuit: motor, motor cable, thermal relay or output filter. Motor lost will cause a trip, and the motor will coast to standstill, when a missing motor phase is detected during a period of 500 ms. The detection time during start is 10 ms.

423 Motor lost		
Default:		Off
Off	0	Function switched off to be used if no motor or very small motor connected.
Trip	1	AC drive will trip when the motor is disconnected. Trip message “Motor Lost”.
Start	2	Test for disconnected motor will only be performed during start routine.

Communication information

Modbus Instance no/DeviceNet no:	43363
Profibus slot/index	170/12
EtherCAT and CANopen index (hex)	4d23
Profinet IO index	19747
Fieldbus format	UInt
Modbus format	UInt

Overvolt control [424]

Used to switch off the overvoltage control function when only braking by brake chopper and resistor is required. The overvoltage control function, limits the braking torque so that the DC link voltage level is controlled at a high, but safe, level. This is achieved by limiting the actual deceleration rate during stopping. In case of a defect at the brake chopper or the brake resistor the AC drive will trip for “Overvoltage” to avoid a fall of the load e.g. in crane applications.

NOTE: Overvoltage control should not be activated if brake chopper is used.

424 Over Volt Ctl		
Default:		On
On	0	Overvoltage control activated
Off	1	Overvoltage control off

Communication information

Modbus Instance no/DeviceNet no:	43364
Profibus slot/index	170/13
EtherCAT and CANopen index (hex)	4d24
Profinet IO index	19748
Fieldbus format	UInt
Modbus format	UInt

NOTE: LVO and OVC are not active in torque mode.

11.7 I/Os and Virtual Connections [500]

Main menu with all the settings of the standard inputs and outputs of the AC drive.

11.7.1 Analogue Inputs [510]

Submenu with all settings for the analogue inputs.

AnIn1 Function [511]

Sets the function for Analogue input 1. Scale and range are defined by AnIn1 Advanced settings [513].

511 AnIn1 Fc		
Default:		Process Ref
Off	0	Input is not active
Max Speed	1	The input acts as an upper speed limit.
Max Torque	2	The input acts as an upper torque limit.
Process Val	3	The input value equals the actual process value (feedback) and is compared to the reference signal (set point) by the PID controller, or can be used to display and view the actual process value.
Process Ref	4	Reference value is set for control in process units, see Process Source [321] and Process Unit [322].
Min Speed	5	The input acts as a lower speed limit.

Communication information

Modbus Instance no/DeviceNet no:	43201
Profibus slot/index	169/105
EtherCAT and CANopen index (hex)	4c81
Profinet IO index	19585
Fieldbus format	UInt
Modbus format	UInt

NOTE: When AnInX Func=Off, the connected signal will still be available for Comparators [610].

Adding analogue inputs

If more than one analogue input is set to the same function, the values of the inputs can be added together. In the following examples we assume that Process Source [321] is set to Speed.

Example 1: Add signals with different weight (fine tuning).

Signal on AnIn1 = 10 mA
Signal on AnIn2 = 5 mA

[511] AnIn1 Function = Process Ref.
[512] AnIn1 Setup = 4-20 mA
[5134] AnIn1 Function Min = Min (0 rpm)
[5136] AnIn1 Function Max = Max (1500 rpm)
[5138] AnIn1 Operation = Add+
[514] AnIn2 Function = Process Ref.
[515] AnIn2 Setup = 4-20 mA
[5164] AnIn2 Function Min = Min (0 rpm)
[5166] AnIn2 Function Max = User defined
[5167] AnIn2 Value Max = 300 rpm
[5168] AnIn2 Operation = Add+

Calculation:

AnIn1 = (10-4) / (20-4) x (1500-0) + 0 = 562.5 rpm

AnIn2 = (5-4) / (20-4) x (300-0) + 0 = 18.75 rpm

The actual process reference will be:
+562.5 + 18.75 = 581 rpm

Analogue Input Selection via Digital Inputs:

When two different external Reference signals are used, e.g. 4-20mA signal from control centre and a 0-10 V locally mounted potentiometer, it is possible to switch between these two different analogue input signals via a Digital Input set to “AnIn Select”.

AnIn1 is 4-20 mA
AnIn2 is 0-10 V

DigIn3 is controlling the AnIn selection; HIGH is 4-20 mA, LOW is 0-10 V

“[511] AnIn1 Fc” = Process Ref;
set AnIn1 as reference signal input

“[512] AnIn1 Setup” = 4-20mA;
set AnIn1 for a current reference signal

“[513A] AnIn1 Enabl” = DigIn;
set AnIn1 to be active when DigIn3 is HIGH

“[514] AnIn2 Fc” = Process Ref;
set AnIn2 as reference signal input

“[515] AnIn2 Setup” = 0-10V;
set AnIn2 for a voltage reference signal

“[516A] AnIn2 Enabl” = !DigIn;
set AnIn2 to be active when DigIn3 is LOW

“[523] DigIn3=AnIn”;
set DIgIn3 as input fot selection of AI reference

Subtracting analogue inputs

Example 2: Subtract two signals

Signal on AnIn1 = 8 V
Signal on AnIn2 = 4 V

[511] AnIn1 Function = Process Ref.
[512] AnIn1 Setup = 0-10 V
[5134] AnIn1 Function Min = Min (0 rpm)
[5136] AnIn1 Function Max = Max (1500 rpm)
[5138] AnIn1 Operation = Add+
[514] AnIn2 Function = Process Ref.
[515] AnIn2 Setup = 0-10 V
[5164] AnIn2 Function Min = Min (0 rpm)
[5166] AnIn2 Function Max = Max (1500 rpm)
[5168] AnIn2 Operation = Sub-

Calculation:
AnIn1 = (8-0) / (10-0) x (1500-0) + 0 = 1200 rpm
AnIn2 = (4-0) / (10-0) x (1500-0) + 0 = 600 rpm

The actual process reference will be:
+1200 - 600 = 600 rpm

AnIn1 Setup [512]

The analogue input setup is used to configure the analogue input in accordance with the signal used that will be connected to the analogue input. With this selection the input can be determined as current (4-20 mA) or voltage (0-10 V) controlled input. Other selections are available for using a threshold (live zero), a bipolar input function, or a user defined input range. With a bipolar input reference signal, it is possible to control the motor in two directions. See Fig. 138.

NOTE: The selection of voltage or current input is done with S1. When the switch is in voltage mode only the voltage menu items are selectable. With the switch in current mode only the current menu items are selectable.

512 AnIn1 Setup		
Default:		4-20 mA
Dependent on		Setting of switch S1
4–20mA	0	The current input has a fixed threshold (Live Zero) of 4 mA and controls the full range for the input signal. See Fig. 81.
0–20mA	1	Normal full current scale configuration of the input that controls the full range for the input signal. See Fig. 80.
User mA	2	The scale of the current controlled input, that controls the full range for the input signal. Can be defined by the advanced AnIn Min and AnIn Max menus.
User Bipol mA	3	Sets the input for a bipolar current input, where the scale controls the range for the input signal. Scale can be defined in advanced menu AnIn Bipol.
0–10V	4	Normal full voltage scale configuration of the input that controls the full range for the input signal. See Fig. 80.
2–10V	5	The voltage input has a fixed threshold (Live Zero) of 2 V and controls the full range for the input signal. See Fig. 81.
User V	6	The scale of the voltage controlled input, that controls the full range for the input signal. Can be defined by the advanced AnIn Min and AnIn Max menus.
User Bipol V	7	Sets the input for a bipolar voltage input, where the scale controls the range for the input signal. Scale can be defined in advanced menu AnIn Bipol.

NOTE: For bipol function, input RunR and RunL needs to be active and Rotation, [219] must be set to "R+L".

NOTE: Always check the needed set up when the setting of S1 is changed; selection will not adapt automatically.

Communication information

Modbus Instance no/DeviceNet no:	43202
Profibus slot/index	169/106
EtherCAT and CANopen index (hex)	4c82
Profinet IO index	19586
Fieldbus format	UInt
Modbus format	UInt

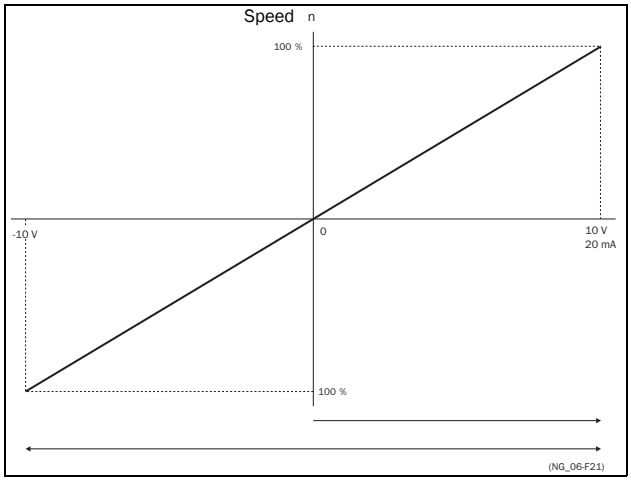

Fig. 138

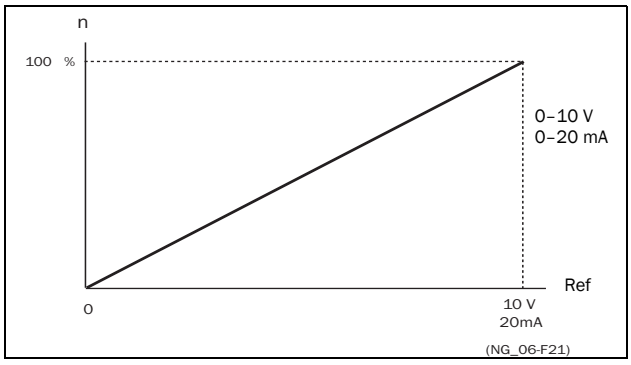

Fig. 139 Normal full-scale configuration

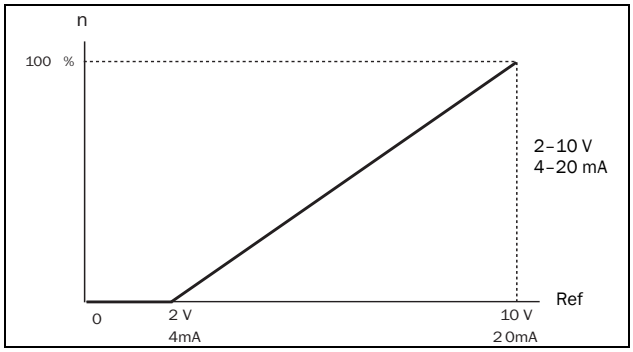

Fig. 140 2–10 V/4–20 mA (Live Zero)

AnIn1 Advanced [513]

NOTE: The different menus will automatically be set to either "mA" or "V", based on the selection in AnIn 1 Setup [512].

513 AnIn1 Advan

AnIn1 Min [5131]

Parameter to set the minimum value of the external reference signal. Only visible if [512] = User mA/V.

5131 AnIn1 Min	
Default:	0 V/4.00 mA
Range:	0.00–20.00 mA 0–10.00 V

Communication information

Modbus Instance no/DeviceNet no:	43203
Profibus slot/index	169/107
EtherCAT and CANopen index (hex)	4c83
Profinet IO index	19587
Fieldbus format	Long, 1=0.01 mA, 0.01 V
Modbus format	Elnt

AnIn1 Max [5132]

Parameter to set the maximum value of the external reference signal. Only visible if [512] = User mA/V.

5132 AnIn1 Max	
Default:	10.00 V/20.00 mA
Range:	0.00–20.00 mA 0–10.00 V

Communication information

Modbus Instance no/DeviceNet no:	43204
Profibus slot/index	169/108
EtherCAT and CANopen index (hex)	4c84
Profinet IO index	19588
Fieldbus format	Long, 1=0.01 mA, 0.01 V
Modbus format	Elnt

Special function: Inverted reference signal

If the AnIn minimum value is higher than the AnIn maximum value, the input will act as an inverted reference input, see Fig. 141.

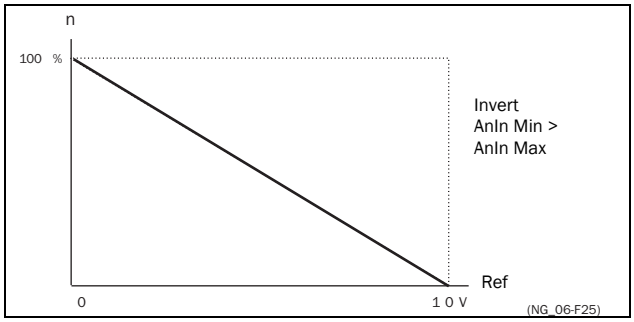

Fig. 141 Inverted reference

AnIn1 Bipol [5133]

This menu is only displayed if AnIn1 Setup is set to User Bipol mA or User Bipol V. The window will automatically show mA or V range according to selected function. The range is set by changing the positive maximum value; the negative value is automatically adapted accordingly. Only visible if [512] = User Bipol mA/V. The inputs RunR and RunL input need to be active, and "Rotation [219]", must be set to "R+L", to operate the bipolar function on the analogue input.

5133 AnIn1 Bipol	
Default:	10.00 V/20.00 mA
Range:	0.0–20.0 mA, 0.00–10.00 V

Communication information

Modbus Instance no/DeviceNet no:	43205
Profibus slot/index	169/109
EtherCAT and CANopen index (hex)	4c85
Profinet IO index	19589
Fieldbus format	Long, 1=0.01 mA, 0.01 V
Modbus format	Elnt

AnIn1 Function Min [5134]

With AnIn1 Function Min the physical minimum value is scaled to selected process unit. The default scaling is dependent of the selected function of AnIn1 [511].

5134 AnIn1 FcMin		
Default:		Min
Min	0	Min value
Max	1	Max value
User-defined	2	Define user value in menu [5135]

Table 38 shows corresponding values for the min and max selections depending on the function of the analogue input [511].

Table 38

AnIn Function	Min	Max
Speed	Min Speed [341]	Max Speed [343]
Torque	0%	Max Torque [351]
Process Ref	Process Min [324]	Process Max [325]
Process Value	Process Min [324]	Process Max [325]

Communication information

Modbus Instance no/DeviceNet no:	43206
Profibus slot/index	169/110
EtherCAT and CANopen index (hex)	4c86
Profinet IO index	19590
Fieldbus format	UInt
Modbus format	UInt

AnIn1 Function Value Min [5135]

With AnIn1 Function ValMin you define a user-defined value for the signal. Only visible when user-defined is selected in menu [5134].

5135 AnIn1 VaMin	
Default:	0.000
Range:	-10000.000 – 10000.000

Communication information

Modbus Instance no/DeviceNet no:	43541
Profibus slot/index	170/190
EtherCAT and CANopen index (hex)	4dd5
Profinet IO index	19925
Fieldbus format	Long, 1=1 rpm, 1 %, 1° or 0.001 if Process Value/ Process Ref using a [322] unit
Modbus format	EInt

AnIn1 Function Max [5136]

With AnIn1 Function Max the physical maximum value is scaled to selected process unit. The default scaling is dependent of the selected function of AnIn1 [511]. See Table 38.

5136 AnIn1 FcMax		
Default:		Max
Min	0	Min value
Max	1	Max value
User-defined	2	Define user value in menu [5137]

Communication information

Modbus Instance no/DeviceNet no:	43207
Profibus slot/index	169/111
EtherCAT and CANopen index (hex)	4c87
Profinet IO index	19591
Fieldbus format	UInt
Modbus format	UInt

AnIn1 Function Value Max [5137]

With AnIn1 Function VaMax you define a user-defined value for the signal. Only visible when user-defined is selected in menu [5136].

5137 AnIn1 VaMax	
Default:	0.000
Range:	-10000.000 – 10000.000

Communication information

Modbus Instance no/DeviceNet no:	43551
Profibus slot/index	170/200
EtherCAT and CANopen index (hex)	4ddf
Profinet IO index	19935
Fieldbus format	Long, 1=1 rpm, 1 %, 1° or 0.001 if Process Value/ Process Ref using a [322] unit
Modbus format	EInt

NOTE: With AnIn Min, AnIn Max, AnIn Function Min and AnIn Function Max settings, loss of feedback signals (e.g. voltage drop due to long sensor wiring) can be compensated to ensure an accurate process control.

Example:
Process sensor is a sensor with the following specification:

Range: 0–3 bar
Output: 2–10 mA

Analogue input should be set up according to:
[512] AnIn1 Setup = User mA
[5131] AnIn1 Min = 2 mA
[5132] AnIn1 Max = 10 mA
[5134] AnIn1 Function Min = User-defined
[5135] AnIn1 VaMin = 0.000 bar
[5136] AnIn 1 Function Max = User-defined
[5137] AnIn1 VaMax = 3.000 bar

AnIn1 Operation [5138]

5138 AnIn1 Oper		
Default:		Add+
Add+	0	Analogue signal is added to selected function in menu [511].
Sub-	1	Analogue signal is subtracted from selected function in menu [511].

Communication information

Modbus Instance no/DeviceNet no:	43208
Profibus slot/index	169/112
EtherCAT and CANopen index (hex)	4c88
Profinet IO index	19592
Fieldbus format	UInt
Modbus format	UInt

AnIn1 Filter [5139]

If the input signal is unstable (e.g. fluctuation reference value), the filter can be used to stabilize the signal. A change of the input signal will reach 63% on AnIn1 within the set AnIn1 Filter time. After 5 times the set time, AnIn1 will have reached 100% of the input change. See Fig. 142.

5139 AnIn1 Filt	
Default:	0.1 s
Range:	0.001 – 10.0 s

Communication information

Modbus Instance no/DeviceNet no:	43209
Profibus slot/index	169/113
EtherCAT and CANopen index (hex)	4c89
Profinet IO index	19593
Fieldbus format	Long, 1=0.001 s
Modbus format	EInt

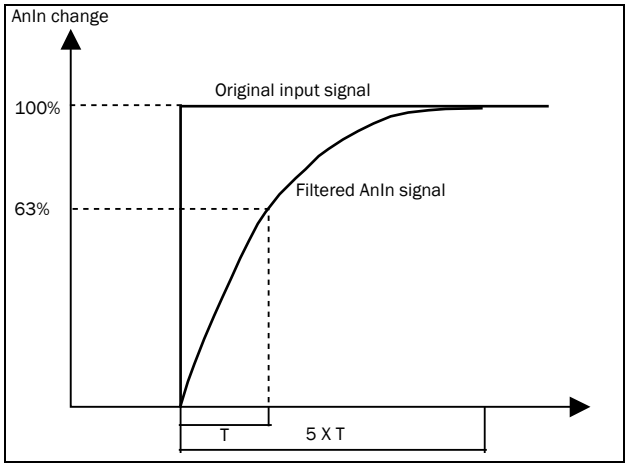

Fig. 142

AnIn1 Enable [513A]

Parameter for enable/disable analogue input selection via digital inputs (DigIn set to function AnIn Select).

513A AnIn1 Enabl		
Default:		On
On	0	AnIn1 is always active
!DigIn	1	AnIn1 is only active if the digital input is low.
DigIn	2	AnIn1 is only active if the digital input is high.

Communication information

Modbus Instance no/DeviceNet no:	43210
Profibus slot/index	169/114
EtherCAT and CANopen index (hex)	4c8a
Profinet IO index	19594
Fieldbus format	UInt
Modbus format	UInt

AnIn2 Function [514]

Parameter for setting the function of Analogue Input 2.

Same function as “AnIn1 Fc [511]”.

514 AnIn2 Fc	
Default:	Off
Selection:	Same as in menu [511]

Communication information

Modbus Instance no/DeviceNet no:	43211
Profibus slot/index	169/115
EtherCAT and CANopen index (hex)	4c8b
Profinet IO index	19595
Fieldbus format	UInt
Modbus format	UInt

AnIn2 Setup [515]

Parameter for setting the function of Analogue Input 2.

Same functions as “AnIn1 Setup [512]”.

515 AnIn2 Setup	
Default:	4 – 20 mA
Dependent on	Setting of switch S2
Selection:	Same as in menu [512].

Communication information

Modbus Instance no/DeviceNet no:	43212
Profibus slot/index	169/116
EtherCAT and CANopen index (hex)	4c8c
Profinet IO index	19596
Fieldbus format	UInt
Modbus format	UInt

AnIn2 Advanced [516]

Same functions and submenus as under “AnIn1 Advan [513]”.

516	AnIn2 Advan

Communication information

Modbus Instance no/DeviceNet no:	43213–43220, 43542, 43552
Profibus slot/index	169/117–124, 170/191, 170/201
EtherCAT and CANopen index (hex)	4c8d - 4c94, 4dd6, 4de0
Profinet IO index	19597-19604, 19926, 19936
Fieldbus format	See [5131] - [5137].
Modbus format	

AnIn3 Function [517]

Parameter for setting the function of Analogue Input 3.

Same function as “AnIn1 Fc [511]”.

517	AnIn3 Fc
Default:	Off
Selection:	Same as in menu [511]

Communication information

Modbus Instance no/DeviceNet no:	43221
Profibus slot/index	169/125
EtherCAT and CANopen index (hex)	4c95
Profinet IO index	19605
Fieldbus format	UInt
Modbus format	UInt

AnIn3 Setup [518]

Same functions as “AnIn1 Setup [512]”.

518	AnIn3 Setup
Default:	4–20 mA
Dependent on	Setting of switch S3
Selection:	Same as in menu [512].

Communication information

Modbus Instance no/DeviceNet no:	43222
Profibus slot/index	169/126
EtherCAT and CANopen index (hex)	4c96
Profinet IO index	19606
Fieldbus format	UInt
Modbus format	UInt

AnIn3 Advanced [519]

Same functions and submenus as under “AnIn1 Advan [513]”.

519	AnIn3 Advan

Communication information

Modbus Instance no/DeviceNet no:	43223–43230, 43543, 43553
Profibus slot/index	169/127–169/134, 170/192, 170/202
EtherCAT and CANopen index (hex)	4c97 - 4c9e, 4dd7, 4de1
Profinet IO index	19607-19614, 19927, 19937
Fieldbus format	See [5131] - [5137].
Modbus format	

AnIn4 Function [51A]

Parameter for setting the function of Analogue Input 4.

Same function as “AnIn1 Fc [511].”

51A	AnIn4 Fc
Default:	Off
Selection:	Same as in menu [511]

Communication information

Modbus Instance no/DeviceNet no:	43231
Profibus slot/index	169/135
EtherCAT and CANopen index (hex)	4c9f
Profinet IO index	19615
Fieldbus format	UInt
Modbus format	UInt

AnIn4 Set-up [51B]

Same functions as “AnIn1 Setup [512]”.

51B	AnIn4 Setup
Default:	4-20 mA
Dependent on	Setting of switch S4
Selection:	Same as in menu [512].

Communication information

Modbus Instance no/DeviceNet no:	43232
Profibus slot/index	169/136
EtherCAT and CANopen index (hex)	4ca0
Profinet IO index	19616
Fieldbus format	UInt
Modbus format	UInt

AnIn4 Advanced [51C]

Same functions and submenus as under “AnIn1 Advan[513]”.

51C AnIn4 Advan

Communication information

Modbus Instance no/DeviceNet no:	43233–43240, 43544, 43554
Profibus slot/index	169/137–144, 170/193, 170/203
EtherCAT and CANopen index (hex)	4ca1 - 4ca8, 4dd8, 4de2
Profinet IO index	19617-19624, 19928, 19938
Fieldbus format	See [5131] - [5137].
Modbus format	

11.7.2 Digital Inputs [520]

Submenu with all the settings for the digital inputs.

NOTE: Additional inputs will become available when the I/O option boards are connected.

Digital Input 1 [521]

To select the function of the digital input.

On the standard control board there are eight digital inputs.

If the same function is programmed for more than one input that function will be activated according to “OR” logic if nothing else is stated.

521 DigIn 1		
Default:		RunL
Off	0	The input is not active.
Ext. Trip	3	Be aware that if there is nothing connected to the input, the AC drive will trip at “External trip” immediately. NOTE: The External Trip is active low. NOTE: Activated according to “AND” logic.
Stop	4	Stop command according to the selected Stop mode in menu [33B]. NOTE: The Stop command is active low. NOTE: Activated according to “AND” logic.
Enable	5	Enable command. General start condition to run the AC drive. If made low during running the output of the AC drive is cut off immediately, causing the motor to coast to zero speed. NOTE: If none of the digital inputs are programmed to “Enable”, the internal enable signal is active. NOTE: Activated according to “AND” logic.
RunR	6	Run Right command (positive speed). The output of the AC drive will be a clockwise rotary field.
RunL	7	Run Left command (negative speed). The output of the AC drive will be a counter-clockwise rotary field.
Reset	9	Reset command. To reset a Trip condition and to enable the Autoreset function.
Preset Ctrl1	10	To select the Preset Reference.
Preset Ctrl2	11	To select the Preset Reference.
Preset Ctrl3	12	To select the Preset Reference.
MotPot Up	13	Increases the internal reference value according to the set AccMotPot time [333]. Has the same function as a “real” motor potentiometer, see Fig. 122.
MotPot Down	14	Decreases the internal reference value according to the set DecMotPot time [334]. See MotPot Up.

Pump1 Feedb	15	Feedback input pump1 for Pump/Fan control and informs about the status of the auxiliary connected pump/fan.
Pump2 Feedb	16	Feedback input pump 2 for Pump/Fan control and informs about the status of the auxiliary connected pump/fan.
Pump3 Feedb	17	Feedback input pump3 for Pump/Fan control and informs about the status of the auxiliary connected pump/fan.
Pump4 Feedb	18	Feedback input pump 4 for Pump/Fan control and informs about the status of the auxiliary connected pump/fan.
Pump5 Feedb	19	Feedback input pump5 for Pump/Fan control and informs about the status of the auxiliary connected pump/fan.
Pump6 Feedb	20	Feedback input pump 6 for Pump/Fan control and informs about the status of the auxiliary connected pump/fan.
Timer 1	21	Timer 1 Delay [643] will be activated on the rising edge of this signal.
Timer 2	22	Timer 2 Delay [653] will be activated on the rising edge of this signal.
Set Ctrl 1	23	Activates other parameter set. See Table 39 for selection possibilities.
Set Ctrl 2	24	Activates other parameter set. See Table 39 for selection possibilities.
Mot PreMag	25	Pre-magnetises the motor. Used for faster motor start.
Jog	26	To activate the Jog function. Gives a Run command with the set Jog speed and Direction, page 155.
Ext Mot Temp	27	Be aware that if there is nothing connected to the input, the AC drive will trip at "External Motor Temp" immediately. NOTE: The External Motor Temp is active low.
Loc/Rem	28	Activate local mode defined in [2171] and [2172].
AnIn select	29	Activate/deactivate analogue inputs defined in [513A], [516A], [519A] and [51CA]
LC Level	30	Liquid cooling low level signal. NOTE: The Liquid Cooling Level is active low.
Brk Ackn	31	Brake acknowledge input for Brake Fault control. Function is activated via this selection see menu [33H] page 150
Sleep	32	Possible to enter sleep mode through DigIn
Timer 1	34	Timer 1 will be activated on the rising edge of this signal.
Timer 2	35	Timer 2 will be activated on the rising edge of this signal.
Timer 3	36	Timer 3 will be activated on the rising edge of this signal.
Timer 4	37	Timer 4 will be activated on the rising edge of this signal.

NOTE: For bipol function, input RunR and RunL needs to be active and "Rotation [219]" must be set to "R+L".

Communication information

Modbus Instance no/DeviceNet no:	43241
Profibus slot/index	169/145
EtherCAT and CANopen index (hex)	4ca9
Profinet IO index	19625
Fieldbus format	UInt
Modbus format	UInt

Table 39

Parameter Set	Set Ctrl 1	Set Ctrl 2
A	0	0
B	1	0
C	0	1
D	1	1

NOTE: To activate the parameter set selection, menu 241 must be set to DigIn.

Digital Input 2 [522] to Digital Input 8 [528]

Same function as "DigIn 1[521]". Default function for DigIn 8 is Reset. For DigIn 3 to 7 the default function is Off.

522 DigIn 2	
Default:	RunR
Selection:	Same as in menu DigIn 1 [521]

Communication information

Modbus Instance no/DeviceNet no:	43242 – 43248
Profibus slot/index	169/146 – 169/152
EtherCAT and CANopen index (hex)	4caa - 4cb0
Profinet IO index	19626 - 19632
Fieldbus format	UInt
Modbus format	UInt

Additional digital inputs [529] to [52H]

Additional digital inputs with I/O option board installed, “B1 DigIn 1 [529]” - “B3 DigIn 3 [52H]”. B stands for board and 1 to 3 is the number of the board which is related to the position of the I/O option board on the option mounting plate. The functions and selections are the same as “DigIn 1 [521]”.

529 B1 Digin 1	
Default:	Off
Selection:	Same as in menu DigIn 1 [521]

Communication information

Modbus Instance no/DeviceNet no:	43501–43509
Profibus slot/index	170/150–170/158
EtherCAT and CANopen index (hex)	4dad - 4db5
Profinet IO index	19885 - 19893
Fieldbus format	UInt
Modbus format	UInt

11.7.3 Analogue Outputs [530]

Submenu with all settings for the analogue outputs. Selections can be made from application and AC drive values, in order to visualize actual status. Analogue outputs can also be used as a mirror of the analogue input. Such a signal can be used as:

- a reference signal for the next AC drive in a Master/Slave configuration (see Fig. 143).
- a feedback acknowledgement of the received analogue reference value.

AnOut1 Function [531]

Sets the function for the Analogue Output 1. Scale and range are defined by AnOut1 Advanced settings [533].

531 AnOut1 Fc		
Default:		Speed
Process Val	0	Actual process value according to Process feedback signal.
Speed	1	Actual speed.
Torque	2	Actual torque.
Process Ref	3	Actual process reference value.
Shaft Power	4	Actual shaft power.
Frequency	5	Actual frequency.
Current	6	Actual current.
El power	7	Actual electrical power.
Output volt	8	Actual output voltage.
DC-voltage	9	Actual DC link voltage.
AnIn1	10	Mirror of received signal value on AnIn1.
AnIn2	11	Mirror of received signal value on AnIn2.
AnIn3	12	Mirror of received signal value on AnIn3.
AnIn4	13	Mirror of received signal value on AnIn4.
Speed Ref	14	Actual internal speed reference Value after ramp and V/Hz.
Torque Ref	15	Actual torque reference value (=0 in V/Hz mode)
AnMux1	16	Result of configured AnMux1 logical block, see [621].
AnMux2	17	Result of configured AnMux2 logical block, see [622].
IGBT Temp	18	Temperature of drive IGBT, see [71A].

NOTE: When selections AnIn1, AnIn2 …. AnIn4 is selected, the setup of the AnOut (menu [532] or [535]) has to be set to 0-10V or 0-20mA. When the AnOut Setup is set to e.g. 4-20mA, the mirroring is not working correct.

Communication information

Modbus Instance no/DeviceNet no:	43251
Profibus slot/index	169/155
EtherCAT and CANopen index (hex)	4cb3
Profinet IO index	19635
Fieldbus format	UInt
Modbus format	UInt

AnOut 1 Setup [532]

Preset scaling and offset of the output configuration.

532 AnOut1 Setup		
Default:		4-20mA
4–20mA	0	The current output has a fixed threshold (Live Zero) of 4 mA and controls the full range for the output signal. See Fig. 140.
0–20mA	1	Normal full current scale configuration of the output that controls the full range for the output signal. See Fig. 139.
User mA	2	The scale of the current controlled output that controls the full range for the output signal. Can be defined by the advanced AnOut Min and AnOut Max menus.
User Bipol mA	3	Sets the output for a bipolar current output, where the scale controls the range for the output signal. Scale can be defined in advanced menu AnOut Bipol.
0-10V	4	Normal full voltage scale configuration of the output that controls the full range for the output signal. See Fig. 139.
2–10V	5	The voltage output has a fixed threshold (Live Zero) of 2 V and controls the full range for the output signal. See Fig. 140.
User V	6	The scale of the voltage controlled output that controls the full range for the output signal. Can be defined by the advanced AnOut Min and AnOut Max menus.
User Bipol V	7	Sets the output for a bipolar voltage output, where the scale controls the range for the output signal. Scale can be defined in advanced menu AnOut Bipol.

Communication information

Modbus Instance no/DeviceNet no:	43252
Profibus slot/index	169/156
EtherCAT and CANopen index (hex)	4cb4
Profinet IO index	19636
Fieldbus format	UInt
Modbus format	UInt

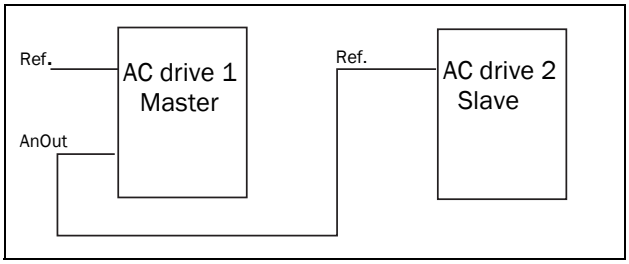

Fig. 143

AnOut1 Advanced [533]

With the functions in the AnOut1 Advanced menu, the output can be completely defined according to the application needs. The menus will automatically be adapted to “mA” or “V”, according to the selection in “AnOut1 Setup [532]”.

533 AnOut 1 Advan

AnOut1 Min [5331]

This parameter is automatically displayed if User mA or User V is selected in menu “AnOut 1 Setup [532]”. The menu will automatically adapt to current or voltage setting according to the selected setup. Only visible if [532] = User mA/V.

5331 AnOut 1 Min	
Default:	4 mA
Range:	0.00 – 20.00 mA, 0 – 10.00 V

Communication information

Modbus Instance no/DeviceNet no:	43253
Profibus slot/index	169/157
EtherCAT and CANopen index (hex)	4cb5
Profinet IO index	19637
Fieldbus format	Long, 1=0.01 V, 0.01 mA
Modbus format	EInt

AnOut1 Max [5332]

This parameter is automatically displayed if User mA or User V is selected in menu "AnOut1 Setup [532]". The menu will automatically adapt to current or voltage setting a ccording to the selected setup. Only visible if [532] = User mA/V.

5332	AnOut 1 Max
Default:	20.00 mA
Range:	0.00–20.00 mA, 0–10.00 V

Communication information

Modbus Instance no/DeviceNet no:	43254
Profibus slot/index	169/158
EtherCAT and CANopen index (hex)	4cb6
Profinet IO index	19638
Fieldbus format	Long, 1=0.01 V, 0.01 mA
Modbus format	Elnt

AnOut1 Bipol [5333]

Automatically displayed if User Bipol mA or User Bipol V is selected in menu AnOut1 Setup. The menu will automatically show mA or V range according to the selected function. The range is set by changing the positive maximum value; the negative value is automatically adapted accordingly. Only visible if [512] = User Bipol mA/V.

5333	AnOut1Bipol
Default:	20mA
Range:	-10.00–10.00 V, -20.0–20.0 mA

Communication information

Modbus Instance no/DeviceNet no:	43255
Profibus slot/index	169/159
EtherCAT and CANopen index (hex)	4cb7
Profinet IO index	19639
Fieldbus format	Long, 1=0.01 V, 0.01 mA
Modbus format	Elnt

AnOut1 Function Min [5334]

With AnOut1 Function Min the physical minimum value is scaled to selected presentation. The default scaling is dependent of the selected function of "AnOut1 [531]".

5334	AnOut1FCMin	
Default:		Min
Min	0	Min value
Max	1	Max value
User-defined	2	Define user value in menu [5335]

Table 40 shows corresponding values for the min and max selections depending on the function of the analogue output [531].

Table 40

AnOut Function	Min Value	Max Value
Process Value	Process Min [324]	Process Max [325]
Speed	Min Speed [341]	Max Speed [343]
Torque	0%	Max Torque [351]
Process Ref	Process Min [324]	Process Max [325]
Shaft Power	0%	Motor Power [223]
Frequency	Fmin *	Motor Frequency [222]
Current	0 A	Motor Current [224]
El Power	0 W	Motor Power [223]
Output Voltage	0 V	Motor Voltage [221]
DC voltage	0 V	1000 V
AnIn1	AnIn1 Function Min	AnIn1 Function Max
AnIn2	AnIn2 Function Min	AnIn2 Function Max
AnIn3	AnIn3 Function Min	AnIn3 Function Max
AnIn4	AnIn4 Function Min	AnIn4 Function Max

*) Fmin is dependent on the set value in menu "Minimum Speed [341]".

Communication information

Modbus Instance no/DeviceNet no:	43256
Profibus slot/index	169/160
EtherCAT and CANopen index (hex)	4cb8
Profinet IO index	19640
Fieldbus format	UInt
Modbus format	UInt

Example

Set the AnOut function for Motorfrequency to 0Hz, set AnOut functionMin [5334] to “User-defined” and AnOut1 VaMin[5335] = 0.0. This results in an anlogue output signal from 0/4 mA to 20mA: 0Hz to Fmot.
This principle is valid for all Min to Max settings.

AnOut1 Function Value Min [5335]

With AnOut1 Function VaMin you define a user-defined value for the signal. Only visible when user-defined is selected in menu [5334].

5335	AnOut1VaMin
Default:	0.000
Range:	-10000.000–10000.000

Communication information

Modbus Instance no/DeviceNet no:	43545
Profibus slot/index	170/194
EtherCAT and CANopen index (hex)	4dd9
Profinet IO index	19929
Fieldbus format	Long, 1=1 rpm, 1 %, 1W, 0.1 Hz, 0.1 V, 0.1 A or 0.001 via process value [322]
Modbus format	Elnt

AnOut1 Function Max [5336]

With AnOut1 Function Max the physical minimum value is scaled to selected presentation. The default scaling is dependent on the selected function of AnOut1 [531]. See Table 40.

5336	AnOut1FCMax	
Default:		Max
Min	0	Min value
Max	1	Max value
User defined	2	Define user value in menu [5337]

Communication information

Modbus Instance no/DeviceNet no:	43257
Profibus slot/index	169/161
EtherCAT and CANopen index (hex)	4cb9
Profinet IO index	19641
Fieldbus format	Ulnt
Modbus format	Ulnt

NOTE: It is possible to set AnOut1 up as an inverted output signal by setting AnOut1 Min > AnOut1 Max. See Fig. 141, page 180.

AnOut1 Function Value Max [5337]

With AnOut1 Function VaMax you define a user-defined value for the signal. Only visible when user-defined is selected in menu [5334].

5337	AnOut1VaMax
Default:	0.000
Range:	-10000.000–10000.000

Communication information

Modbus Instance no/DeviceNet no:	43555
Profibus slot/index	170/204
EtherCAT and CANopen index (hex)	4de3
Profinet IO index	19939
Fieldbus format	Long, 1=1 rpm, 1 %, 1W, 0.1 Hz, 0.1 V, 0.1 A or 0.001 via process value [322]
Modbus format	Elnt

AnOut2 Function [534]

Sets the function for the Analogue Output 2.

534	AnOut2 Fc
Default:	Torque
Selection:	Same as in menu [531]

Communication information

Modbus Instance no/DeviceNet no:	43261
Profibus slot/index	169/165
EtherCAT and CANopen index (hex)	4cbd
Profinet IO index	19645
Fieldbus format	Ulnt
Modbus format	Ulnt

AnOut2 Setup [535]

Preset scaling and offset of the output configuration for analogue output 2.

535 AnOut2 Setup	
Default:	4-20mA
Selection:	Same as in menu [532]

Communication information

Modbus Instance no/DeviceNet no:	43262
Profibus slot/index	169/166
EtherCAT and CANopen index (hex)	4cbe
Profinet IO index	19646
Fieldbus format	UInt
Modbus format	UInt

AnOut2 Advanced [536]

Same functions and submenus as under AnOut1 Advanced [533].

536 AnOut2 Advan

Communication information

Modbus Instance no/DeviceNet no:	43263–43267, 43546, 43556
Profibus slot/index	169/167–169/171, 170/195, 170/205
EtherCAT and CANopen index (hex)	4cbf - 4cc3, 4dda, 4de4
Profinet IO index	19647 - 19651, 19930, 19940
Fieldbus format	See [533]- [5367].
Modbus format	

11.7.4 Digital Outputs [540]

Submenu with all the settings for the digital outputs.

Digital Out 1 [541]

Sets the function for the digital output 1.

NOTE: The definitions described here are valid for the active output condition.

541 DigOut 1		
Default:		Ready
Off	0	Output is not active and constantly low.
On	1	Output is made constantly high, i.e. for checking circuits and trouble shooting.
Run	2	Running. The AC drive output is active = produces current for the motor.
Stop	3	The AC drive output is not active.
0Hz	4	The output frequency=0±0.1Hz when in Run condition.
Acc/Dec	5	The speed is increasing or decreasing along the acc. ramp dec. ramp.
At Process	6	The output = Reference.
At Max spd	7	The frequency is limited by the Maximum Speed.
No Trip	8	No Trip condition active.
Trip	9	A Trip condition is active.
AutoRst Trip	10	Autoreset trip condition active.
Limit	11	A Limit condition is active.
Warning	12	A Warning condition is active.
Ready	13	The AC drive is ready for operation. This means that the AC drive is powered up and healthy.
T= T_{lim}	14	The torque is limited by the torque limit function.
I>I_{nom}	15	The output current is higher than the motor nominal current [224], reduced according to Motor ventilation [228], see Fig. 106, page 112.
Brake	16	The output is used to control a mechanical brake.
SgnI<Offset	17	One of the AnIn input signals is lower than 75% of the threshold level.
Alarm	18	The max or min alarm level has been reached.
Pre-Alarm	19	The max or min pre alarm level has been reached.

Max Alarm	20	The max alarm level has been reached.
Max PreAlarm	21	The max pre alarm level has been reached.
Min Alarm	22	The min alarm level has been reached.
Min PreAlarm	23	The min pre alarm Level has been reached.
CA1	24	Analogue comparator 1 output.
CA2	25	Analogue comparator 2 output.
CA3	26	Analogue comparator 3 output.
CA4	27	Analogue comparator 4 output.
L1	28	Logic 1 expression output
L2	29	Logic 2 expression output
L3	30	Logic 3 expression output
L4	31	Logic 4 expression output
F1	32	Flip flop 1 output
F2	33	Flip flop 2 output
F3	34	Flip flop 3 output
F4	35	Flip flop 4 output
Operation	36	Run command is active or AC drive running. The signal can be used to control the mains contactor if the AC drive is equipped with Standby supply option.
T1Q	37	Timer1 output
T2Q	38	Timer 2 output
T3Q	39	Timer 3 output
T4Q	40	Timer 4 output
Sleeping	41	Sleeping function activated
PumpSlave1	43	Activate pump slave 1
PumpSlave2	44	Activate pump slave 2
PumpSlave3	45	Activate pump slave 3
PumpSlave4	46	Activate pump slave 4
PumpSlave5	47	Activate pump slave 5
PumpSlave6	48	Activate pump slave 6
PumpMaster 1	49	Activate pump master 1
PumpMaster 2	50	Activate pump master 2
PumpMaster 3	51	Activate pump master 3
PumpMaster 4	52	Activate pump master 4
PumpMaster 5	53	Activate pump master 5
PumpMaster 6	54	Activate pump master 6

All Pumps	55	All pumps are running
Only Master	56	Only the master is running
Loc/Rem	57	Local/Rem mode indication Local = 1, Remote = 0
Standby	58	Standby supply option is active
PTC Trip	59	Trip when function is active
PT100 Trip	60	Trip when function is active
Overvolt	61	Overvoltage due to high main voltage
Overvolt G	62	Overvoltage due to generation mode
Overvolt D	63	Overvoltage due to deceleration
Acc	64	Acceleration along the acc. ramp
Dec	65	Deceleration along the dec. ramp
I^2t	66	I^2t limit protection active
V-Limit	67	Overvoltage limit function active
C-Limit	68	Overcurrent limit function active
Overtemp	69	Over temperature warning
Low voltage	70	Low voltage warning
DigIn 1	71	Digital input 1
DigIn 2	72	Digital input 2
DigIn 3	73	Digital input 3
DigIn 4	74	Digital input 4
DigIn 5	75	Digital input 5
DigIn 6	76	Digital input 6
DigIn 7	77	Digital input 7
DigIn 8	78	Digital input 8
ManRst Trip	79	Active trip that needs to be manually reset
Com Error	80	Serial communication lost
External Fan	81	The AC drive requires external cooling. Internal fans are active.
LC Pump	82	Activate liquid cooling pump
LC HE Fan	83	Activate liquid cooling heat exchanger fan
LC Level	84	Liquid cooling low level signal active
Run Right	85	Positive speed (>0.5%), i.e. forward/ clockwise direction.
Run Left	86	Negative speed (<0.5%), i.e. reverse counter clockwise direction.
Com Active	87	Fieldbus communication active.
Brk Fault	88	Tripped on brake fault (not released)
BrkNotEngage	89	Warning and continued operation (keep torque) due to Brake not engaged during stop.
Option	90	Failure occurred in built-in option board.
NOT1	91	NOT gate 1 output
NOT2	92	NOT gate 2 output

NOT3	93	NOT gate 3 output
NOT4	94	NOT gate 4 output
NOT5	95	NOT gate 5 output
NOT6	96	NOT gate 6 output
NOT7	97	NOT gate 7 output
NOT8	98	NOT gate 8 output
CTR1	99	Counter 1 output
CTR2	100	Counter 2 output
CLK1	101	Clock logic 1output
CLK2	102	Clock logic 2 output
Enc Error	103	Tripped on Encoder error
Spin Start	105	Spin start is active
kWh-Pulses	106	kWh pulses counter

Communication information

Modbus Instance no/DeviceNet no:	43271
Profibus slot/index	169/175
EtherCAT and CANopen index (hex)	4cc7
Profinet IO index	19655
Fieldbus format	UInt
Modbus format	UInt

Digital Out 2 [542]

NOTE: The definitions described here are valid for the active output condition.

Sets the function for the digital output 2.

542	DigOut2
Default:	No Trip
Selection:	Same as in menu DigOut 1 [541]

Communication information

Modbus Instance no/DeviceNet no:	43272
Profibus slot/index	169/176
EtherCAT and CANopen index (hex)	4cc8
Profinet IO index	19656
Fieldbus format	UInt
Modbus format	UInt

11.7.5 Relays [550]

Submenu with all the settings for the relay outputs. The relay mode selection makes it possible to establish a "fail safe" relay operation by using the normal closed contact to function as the normal open contact.

NOTE: Additional relays will become available when I/O option boards are connected. Maximum 3 boards with 3 relays each.

Relay 1 [551]

Sets the function for the relay output 1. Same function as digital output 1 [541] can be selected.

551	Relay 1
Default:	Trip
Selection:	Same as in menu DigOut 1 [541]

Communication information

Modbus Instance no/DeviceNet no:	43273
Profibus slot/index	169/177
EtherCAT and CANopen index (hex)	4cc9
Profinet IO index	19657
Fieldbus format	UInt
Modbus format	UInt

Relay 2 [552]

NOTE: The definitions described here are valid for the active output condition.

Sets the function for the relay output 2.

552	Relay 2
Default:	Run
Selection:	Same as in menu DigOut 1 [541]

Communication information

Modbus Instance no/DeviceNet no:	43274
Profibus slot/index	169/178
EtherCAT and CANopen index (hex)	4cca
Profinet IO index	19658
Fieldbus format	UInt
Modbus format	UInt

Relay 3 [553]

Sets the function for the relay output 3.

553	Relay 3
Default:	Off
Selection:	Same as in menu DigOut 1 [541]

Communication information

Modbus Instance no/DeviceNet no:	43275
Profibus slot/index	169/179
EtherCAT and CANopen index (hex)	4ccb
Profinet IO index	19659
Fieldbus format	UInt
Modbus format	UInt

Board Relay [554] to [55C]

These additional relays are only visible if an I/O option board is fitted in slot 1, 2, or 3. The outputs are named B1 Relay 1–3, B2 Relay 1–3 and B3 Relay 1–3. B stands for board and 1–3 is the number of the board which is related to the position of the I/O option board on the option mounting plate. See menu DigOut 1 [541].

NOTE: Visible only if optional board is detected or if any input/output is activated.

Communication information

Modbus Instance no/DeviceNet no:	43511–43519
Profibus slot/index	170/160–170/168
EtherCAT and CANopen index (hex)	4db7 - 4dbf
Profinet IO index	19895 - 19903
Fieldbus format	UInt
Modbus format	UInt

Relay Advanced [55D]

This function makes it possible to ensure that the relay will also be closed when the AC drive is malfunctioning or powered down.

Example

A process always requires a certain minimum flow. To control the required number of pumps by the relay mode NC, the e.g. the pumps can be controlled normally by the pump control, but are also activated when the AC drive is tripped or powered down.

55D	Relay Advan

Relay 1 Mode [55D1]

55D1	Relay1 Mode	
Default:		N.O
N.O	0	The normal open contact of the relay will be activated when the function is active.
N.C	1	The normally closed contact of the relay will act as a normal open contact. The contact will be opened when function is not active and closed when function is active.

Communication information

Modbus Instance no/DeviceNet no:	43276
Profibus slot/index	169/180
EtherCAT and CANopen index (hex)	4ccc
Profinet IO index	19660
Fieldbus format	UInt
Modbus format	UInt

Relay Modes [55D2] to [55DC]

Same function as for “Relay 1 Mode [55D1]”.

Communication information

Modbus Instance no/DeviceNet no:	43277, 43278, 43521–43529
Profibus slot/index	169/181, 169/182, 170/170–170/178
EtherCAT and CANopen index (hex)	4ccd, 4cce, 4dc1 - 4dc9
Profinet IO index	19661, 19662, 19905 - 19913
Fieldbus format	UInt
Modbus format	UInt

11.7.6 Virtual Connections [560]

Functions to enable eight internal connections of comparator, timer and digital signals, without occupying physical digital in/outputs. Virtual connections are used to wireless connection of a digital output function to a digital input function. Available signals and control functions can be used to create your own specific functions.

Example of start delay

The motor will start in RunR 10 seconds after DigIn1 gets high. DigIn1 has a time delay of 10 s.

Menu	Parameter	Setting
[521]	DigIn1	Timer 1
[561]	VIO 1 Dest	RunR
[562]	VIO 1 Source	T1Q
[641]	Timer1 Trig	DigIn 1
[642]	Timer1 Mode	Delay
[643]	Timer1 Delay	0:00:10

NOTE: When a digital input and a virtual destination are set to the same function, this function will act as an OR logic function.

Virtual Connection 1 Destination [561]

With this function the destination of the virtual connection is established. When a function can be controlled by several sources, e.g. VC destination or Digital Input, the function will be controlled in conformity with "OR logic". See DigIn for descriptions of the different selections.

561 VIO 1 Dest	
Default:	Off
Selection:	Same selections as for Digital Input 1, menu [521].

Communication information

Modbus Instance no/DeviceNet no:	43281
Profibus slot/index	169/185
EtherCAT and CANopen index (hex)	4cd1
Profinet IO index	19665
Fieldbus format	UInt
Modbus format	UInt

Virtual Connection 1 Source [562]

With this function the source of the virtual connection is defined. See DigOut 1 for description of the different selections.

562 VIO 1 Source	
Default:	Off
Selection:	Same as for menu [541].

Communication information

Modbus Instance no/DeviceNet no:	43282
Profibus slot/index	169/186
EtherCAT and CANopen index (hex)	4cd2
Profinet IO index	19666
Fieldbus format	UInt
Modbus format	UInt

Virtual Connections 2-8 [563] to [56G]

Same function as virtual connection 1 [561] and [562].

Communication information for virtual connections 2-8 Destination.

Modbus Instance no/DeviceNet no:	43283, 43285, 43287, 43289, 43291, 43293, 43295
Profibus slot/index	169/ 187, 189, 191, 193, 195, 197, 199
EtherCAT and CANopen index (hex)	4cd3, 4cd5, 4cd17, 4cd9, 4cdb, 4cdd, 4cdf
Profinet IO index	19667, 19669, 19671, 19673, 19675, 19677, 19679
Fieldbus format	UInt
Modbus format	UInt

Communication information for virtual connections 2-8 Source.

Modbus Instance no/DeviceNet no:	43284, 43286, 43288, 43290, 43292, 43294, 43296
Profibus slot/index	169/ 188, 190, 192, 194, 196, 198, 200
EtherCAT and CANopen index (hex)	4cd4, 4cd6, 4cd8, 4cda, 4cdc, 4cde, 4ce0
Profinet IO index	19668, 19670, 19672, 19674, 19676, 19678, 19680
Fieldbus format	UInt
Modbus format	UInt

11.8 Logical Functions and Timers [600]

With the Comparators, Logic Functions and Timers, conditional signals can be programmed for control or signalling features. This gives you the ability to compare different signals and values in order to generate monitoring/ controlling features.

11.8.1 Comparators [610]

The comparators available make it possible to monitor different internal signals and values, and visualize via digital relay outputs, when a specific value or status is reached or established.

Analogue comparators [611] - [614]

There are 4 analogue comparators that compare any available analogue value (including the analogue reference inputs) with two adjustable levels. The two levels available are Level HI and Level LO. There are two analogue comparator types selectable, an analogue comparator with hysteresis and an analogue window comparator.
The analogue hysteresis type comparator uses the two available levels to create a hysteresis for the comparator between setting and resetting the output. This function gives a clear difference in switching levels, which lets the process adapt until a certain action is started. With such a hysteresis, even an unstable analogue signal can be monitored without getting a nervous comparator output signal. Another feature is the possibility to get a fixed indication that a certain level has been passed. The comparator can latch by setting Level LO to a higher value than Level HI.

The analogue window comparator uses the two available levels to define the window in which the analogue value should be within for setting the comparator output.
The input analogue value of the comparator can also be selected as bipolar, i.e. treated as signed value or unipolar, i.e. treated as absolute value.

Refer to Fig. 148, page 200 where these functions are illustrated.

Digital comparators [615]

There are 4 digital comparators that compare any available digital signal.

The output signals of these comparators can be logically tied together to yield a logical output signal.

All the output signals can be programmed to the digital or relay outputs or used as a source for the virtual connections [560].

Analogue Comparator 1 Setup [611]

Analogue comparator 1, parameter group.

Analogue Comparator 1 Value [6111]

Selection of the analogue value for Analogue Comparator 1 (CA1).

Analogue comparator 1 compares the selectable analogue value in menu [6111] with the constant Level HI in menu [6112] and constant Level LO in menu [6113]. If Bipolar type[6115] input signal is selected then the comparison is made with sign otherwise if unipolar selected then comparison is made with absolute values.

For Hysteresis comparator type [6114], when the value exceeds the upper limit level high, the output signal CA1 is set high and !A1 low, see Fig. 144. When the value decreases below the lower limit, the output signal CA1 is set low and !A1 high.

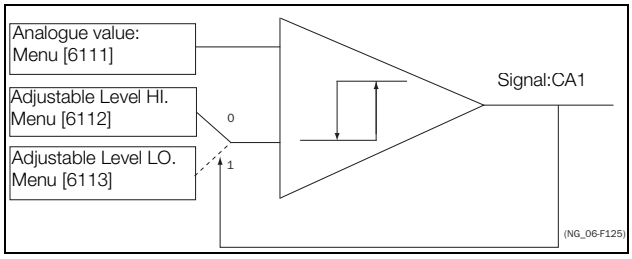

Fig. 144 Analogue comparator type Hysteresiss

For Window comparator type [6114], when the value is between the lower and upper levels, the output signal value CA1 is set high and !A1 low, see Fig. 147, page 198. When the value is outside the band of lower and upper levels, the output CA1 is set low and !A1 high.

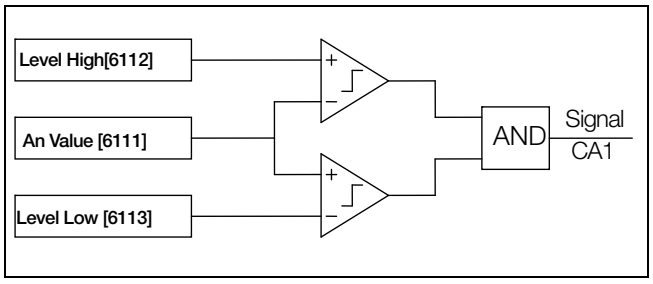

Fig. 145 Analogue comparator type "Window"

The output signal can be programmed as a virtual connection source and to the digital or relay outputs.

6111 CA1 Value		
Default:		Speed
Process Val	0	Set by Process settings [321] and [322]
Speed	1	rpm
Torque	2	%
Shaft Power	3	kW
El Power	4	kW
Current	5	A
Output Volt	6	V
Frequency	7	Hz
DC Voltage	8	V
IGBT Temp	9	°C
PT100_1	10	°C
PT100_2	11	°C
PT100_3	12	°C
Energy	13	kWh
Run Time	14	h
Mains Time	15	h
AnIn1	16	%
AnIn2	17	%
AnIn3	18	%
AnIn4	19	%
Process Ref	20	Set by Process settings [321] and [322]
Process Err	21	
PT100_4	22	°C
PT100_5	23	°C
PT100_6	24	°C
AnMux1	25	%
AnMux2	26	%

Communication information

Modbus Instance no/DeviceNet no:	43401
Profibus slot/index	170/50
EtherCAT and CANopen index (hex)	4d49
Profinet IO index	19758
Fieldbus format	UInt
Modbus format	UInt

Example

Create automatic RUN/STOP signal via the analogue reference signal. Analogue current reference signal, 4-20 mA, is connected to Analogue Input 1. “AnIn1 Setup”, menu [512] = 4-20 mA and the threshold is 4 mA. Full scale (100%) input signal on “AnIn 1” = 20 mA. When the reference signal on “AnIn1” increases 80% of the threshold (4 mA x 0.8 = 3.2 mA), the AC drive will be set in RUN mode. When the signal on “AnIn1” goes below 60% of the threshold (4 mA x 0.6 = 2.4 mA) the AC drive is set to STOP mode. The output of CA1 is used as a virtual connection source that controls the virtual connection destination RUN.

Menu	Function	Setting
511	AnIn1 Function	Process reference
512	AnIn1 Set-up	4-20 mA, threshold is 4 mA
341	Min Speed	0
343	Max Speed	1500
6111	CA1 Value	AnIn1
6112	CA1 Level HI	16% (3.2mA/20mA x 100%)
6113	CA1 Level LO	12% (2.4mA/20mA x 100%)
6114	CA1 Type	Hysteresis
561	VIO 1 Dest	RunR
562	VIO 1 Source	CA1
215	Run/Stp Ctrl	Remote

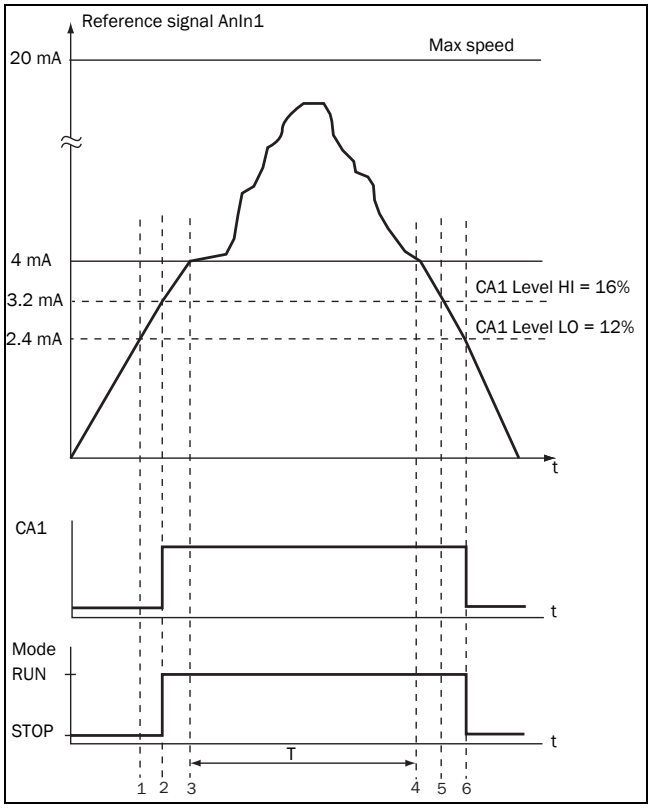

Fig. 146

No.	Description
1	The reference signal passes the Level LO value from below (positive edge), the comparator CA1 output stays low, mode=RUN.
2	The reference signal passes the Level HI value from below (positive edge), the comparator CA1 output is set high, mode=RUN.
3	The reference signal passes the threshold level of 4 mA, the motor speed will now follow the reference signal.
T	During this period the motor speed will follow the reference signal.
4	The reference signal reaches the threshold level, motor speed is 0 rpm, mode = RUN.
5	The reference signal passes the Level HI value from above (negative edge), the comparator CA1 output stays high, mode =RUN.
6	The reference signal passes the Level LO value from above (negative edge), the comparator CA1 output=STOP.

Analogue Comparator 1, Level High [6112]

Sets the analogue comparator high level, with range according to the selected value in menu [6111].

6112	CA1 Level HI
Default:	300 rpm
Range:	See min/max in table below.

Min/Max setting range for menu [6112]

Mode	Min	Max	Decimals
Process Val	Set by Process settings [321] and [322]		3
Speed, rpm	0	Max speed	0
Torque, %	0	Max torque	0
Shaft Power, kW	0	Motor P_nx4	0
El Power, kW	0	Motor P_nx4	0
Current, A	0	Motor I_nx4	1
Output volt, V	0	1000	1
Frequency, Hz	0	400	1
DC voltage, V	0	1250	1
IGBT temp, °C	0	100	1
PT 100_1_2_3, °C	-100	300	1
PT 100_4_5_6, °C	-100	300	1
Energy, kWh	0	1000000	0
Run time, h	0	65535	0
Mains time, h	0	65535	0
AnIn 1-4%	0	100	0
AnMux 1-2	0	100	0
Process Ref	Set by Process settings [321] and [322]		3
Process Err	Set by Process settings [321] and [322]		3

NOTE: If Bipolar selected [6115] then Min value is equal to -Max in the table.

Communication information

Modbus Instance no/DeviceNet no:	43402
Profibus slot/index	170/51
EtherCAT and CANopen index (hex)	4d4a
Profinet IO index	19786
Fieldbus format	Long, 1=1 W, 0.1 A, 0.1 V, 0.1 Hz, 0.1°C, 1 kWh, 1H, 1%, 1 rpm or 0.001 via process value
Modbus format	EInt

Example

This example describes, both for hysteresis and window type comparator, the normal use of the constant level high and low.

Menu	Function	Setting
343	Max Speed	1500
6111	CA1 Value	Speed
6112	CA1 Level HI	300 rpm
6113	CA1 Level LO	200 rpm
6114	CA1 Type	Hysteresis
561	VC1 Dest	Timer 1
562	VC1 Source	CA1

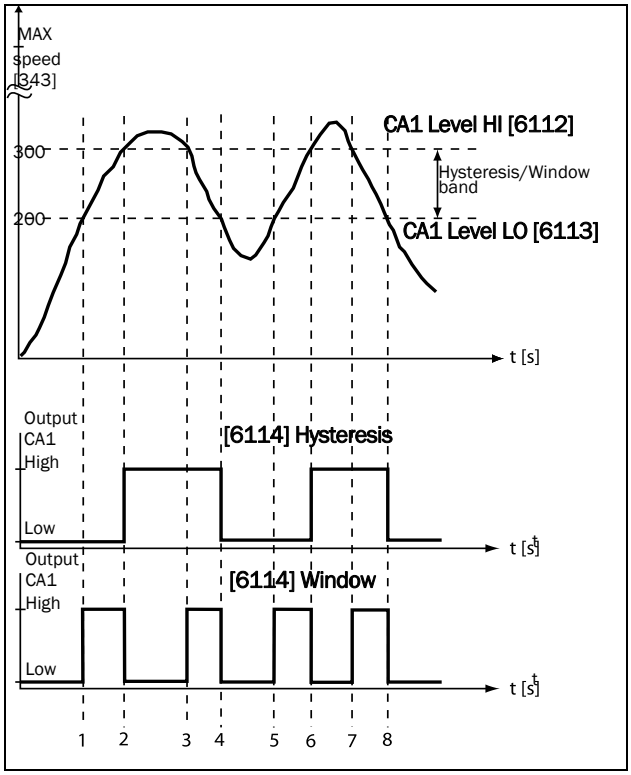

Fig. 147

Table 41 Comments to Fig. 147 regarding Hysteresis selection.

No.	Description	Hysteresis
1	The reference signal passes the Level LO value from below (positive edge), the comparator CA1 does not change, output stays low.	—
2	The reference signal passes the Level HI value from below (positive edge), the comparator CA1 output is set high.	↑
3	The reference signal passes the Level HI value from above (negative edge), the comparator CA1 does not change, output stays high.	—
4	The reference signal passes the Level LO value from above (negative edge), the comparator CA1 is reset, output is set low.	↓
5	The reference signal passes the Level LO value from below (positive edge), the comparator CA1 does not change, output stays low.	—
6	The reference signal passes the Level HI value from below (positive edge), the comparator CA1 output is set high.	↑
7	The reference signal passes the Level HI value from above (negative edge), the comparator CA1 does not change, output stays high.	—
8	The reference signal passes the Level LO value from above (negative edge), the comparator CA1 is reset, output is set low.	↓

Table 42 Comments to Fig. 147 regarding Window selection.

No.	Description	Window
1	The reference signal passes the Level LO value from below (signal inside Window band), the comparator CA1 output is set high.	
2	The reference signal passes the Level LO value from above (signal outside Window band), the comparator CA1 is reset, output is set low.	
3	The reference signal passes the Level HI value from above (signal inside Window band), the comparator CA1 output is set high.	
4	The reference signal passes the Level LO value from above (signal outside Window band), the comparator CA1 is reset, output is set low.	
5	The reference signal passes the Level LO value from below (signal inside Window band), the comparator CA1 output is set high.	
6	The reference signal passes the Level HI value from below (signal outside Window band),the comparator CA1 is reset, output is set low.	
7	The reference signal passes the Level HI value from above (signal inside Window band), the comparator CA1 output is set high.	
8	The reference signal passes the Level LO value from above (signal outside Window band), the comparator CA1 is reset, output is set low.	

Analogue Comparator 1, Level Low [6113]

Sets the analogue comparator low level, with unit and range according to the selected value in menu [6111].

6113 CA1 Level LO	
Default:	200 rpm
Range:	Range as [6112].

Communication information

Modbus Instance no/DeviceNet no:	43403
Profibus slot/index	170/52
EtherCAT and CANopen index (hex)	4d4b
Profinet IO index	19787
Fieldbus format	Long, 1=1 W, 0.1 A, 0.1 V, 0.1 Hz, 0.1°C, 1 kWh, 1H, 1%, 1 rpm or 0.001 via process value
Modbus format	EInt

Analogue Comparator 1, Type [6114]

Selects the analogue comparator type, i.e. Hysteresis or Window type. See Fig. 148 and Fig. 149.

6114 CA1 Type		
Default:		Hysteresis
Hysteresis	0	Hysteresis type comparator
Window	1	Window type comparator

Communication information

Modbus Instance no/DeviceNet no:	43481
Profibus slot/index	170/130
EtherCAT and CANopen index (hex)	4d99
Profinet IO index	19865
Fieldbus format	UInt
Modbus format	UInt

Analogue Comparator 1, Polarity[6115]

Selects how the selected value in [6111] should be handled prior to the analogue comparator , i.e. as absolute value or handled with sign. See Fig. 148

6115 CA1 Polar		
Default:		Unipolar
Unipolar	0	Absolute value of [6111] used
Bipolar	1	Signed value of [6111] used

Communication information

Modbus Instance no/DeviceNet no:	43486
Profibus slot/index	170/135
EtherCAT and CANopen index (hex)	4d9e
Profinet IO index	19870
Fieldbus format	UInt
Modbus format	UInt

Example

See Fig. 148 and Fig. 149 for different principle functionality of comparator features 6114 and 6115.

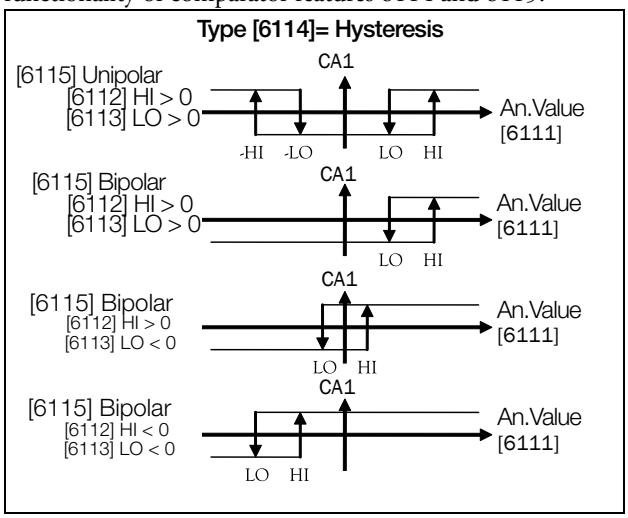

Fig. 148 Principle functionality of comparator features for "Type [6114] = Hysteresis " and "Polar [6115]".

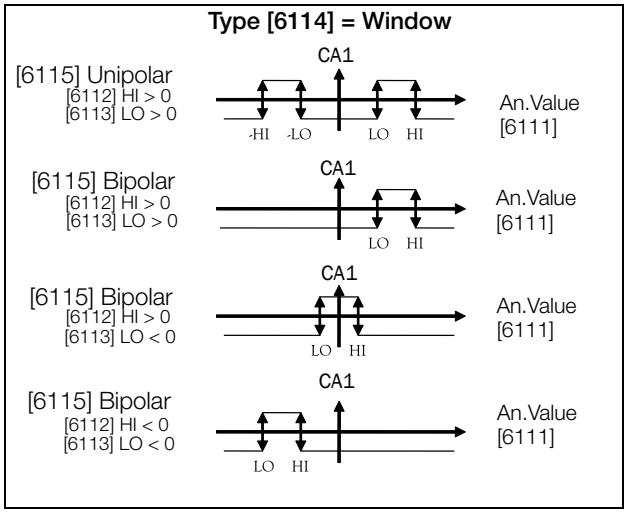

Fig. 149 Principle functionality of comparator features for "Type [6114] =Window " and "Polar [6115]".

NOTE: When "Unipolar " is selected, absolute value of signal is used.

NOTE: When "Bipolar" is selected in [6115] then:
1. Functionality is not symmetrical .
2. Ranges for high/low are bipolar

Analogue Comparator 1 Set Delay [6116]

The output signal for the analogue comparator 1 is delayed with the set value in this menu. See fig. 150.

6116 CA1 Set Dly	
Default:	0 s
Range:	0 - 36000 s

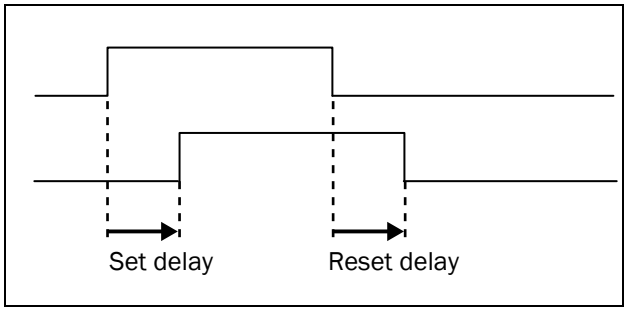

Fig. 150 Set/reset delay for output signal.

Analogue Comparator 1 Reset Delay [6117]

The reset of the output signal for the analogue comparator 1 is delayed with the set time in this menu. See fig. 150.

6117	CA1 Res Dly
Default:	0 s
Range:	0 - 36000 s

Analogue Comparator 1 Timer Value [6118]

The actual timer value for analogue comparator 1 is viewed in this menu.

6118	CA1 Tmr Val
Default:	0 s
Range:	0 - 36000 s

Setup Analogue Comparators 2-4 [612] - [614]

Refer to the descriptions for Analogue Comparator 1. See page 276 regarding defaults.

11.8.2 Analogue Multiplexer [620]

The Analog Mux compares two configurable analogue input signals (InA and InB) and generates a virtual analogue output. Output behavior depends on the configured operator. Output can be used as source for analogue output or input value to analogue comparators.

Since both input and output is limited to range -100% to 100% some operations might overflow. Result is always limited within the range. Consequently some operators have a "divided by 2" variant to always produce overflow safe variants (result is always within the range).

AnMux1 [621]

AnMux InA [6211]

First input to the AnMux1. Select one of AnIn1 - 4. Input numbered as [6111], i.e. AnIn1 = 16 and default is AnIn1.

6211	AnMux InA
Default:	Process Val
Selections:	Same as in menu CA1 Value [6111].

AnMux InB [6212]

Second input to AnMux1. Select one of AnIn1 - 4. Input numbered as [6111], i.e. AnIn1 = 16 and default is AnIn2.

6212	AnMux InB
Default:	Process Val
Selections:	Same as in menu CA1 Value [6112].

Operator [6213]

Operator of the Analogue Mux 1. The names shown on the control panel will be changed according to the following.

6213 Operator		
Default:		Off
Off	0	No output
MIN(A,B)	1	Minimal value of InA and InB
MAX(A,B)	2	Max value of InA and InB
A+B	3	Sum of InA and InB
(A+B)/2	4	Sum of InA and InB that is overflow safe
A-B	5	Difference of InA and InB
(A-B)/2	6	Difference of InA and InB that is overflow safe
B-A	7	Difference of InB and InA
(B-A)/2	8	Difference of InB and InA that is overflow safe
ABS(A-B)	9	Absolute value of difference of InA and InB.
ABS(A-B)/2	10	Absolute value of difference of InA and InB that is overflow safe

AnMux2 [622]

The same function as in Analog Mux1[621].

AnMux InA [6221]

The function is the same as in Analogue Mux InA value [6211].

6221 AnMux InA	
Default:	Process value
Selections:	Same as in menu CA1 Value [6111].

AnMux InB [6222]

The function is the same as in Analogue Mux InB value [6212].

6222 AnMux InB	
Default:	Process value
Selections:	Same as in menu CA1 Value [6112].

Operator [6223]

The function is the same as in Operator [6213].

6223 Operator	
Default:	Off
Selections:	Same as in menu Operator [6113].

11.8.3 Not Gate [630]

Output of the NOT gate is the inverted signal of the selected input. NOT gates are used when some other function (logic expression, digital out, virtual IO) needs the inverted signal.

NOT1 Input [631]

631 NOT1 Input	
Default:	CA2
Selection:	Same as in menu DigOut 1 [541].

NOT2 Input [632] - NOT8 Input [638]

Refer to the descriptions for NOT1 Input [631]. For default values see Chapter 15. page 263.

11.8.4 Logic output [640]

Logic Output 1 [641]

By means of an expression editor, the input signals can be logically combined into the logics function to create a logic output signal.

The expression editor has the following features:

- All available digital output signals can be used as input to the logic block.
- The following logical operators are available:
  "+" : OR operator
  "&" : AND operator
  "^" : EXOR operator
  "." : This close the expression

Expressions according to the following truth table can be made (see also the example below):

Input		Result		
A	**B**	**& (AND)**	**+ (OR)**	**^(EXOR)**
0	0	0	0	0
0	1	0	1	1
1	0	0	1	1
1	1	1	1	0

The output signal can be programmed to the relay outputs or used as a virtual connection source [560].

The logic expression must be programmed by means of the menus [6411] to [641B], and its actual appearance can be viewed in menu [641], with example below:

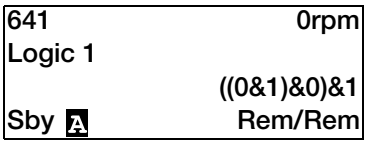

Menu [641] shows the actual values of the four selected input signals set in menus [6412], [6414], [6416] and [6418].

Logic 1 Expression [6411]

Selection of execution order of the logic expression for the Logic 1 function:

6411 L1 Expr		
Default:		((1.2).3).4
((1.2).3).4	0	Default execution order, see explanation below.
(1.2).(3.4)	1	Alternative execution order, see explanation below.

- Parentheses ( ) show the order in which the Logic 1 Inputs are combined, according to [6211].
- 1, 2, 3, and 4, represent the Logic 1 Input signals selected in menu [6412], [6414], [6416], and [6418].
- The dots stand for the Logic 1 Operators (&, +, or ^), whose values are selected in menus [6413], [6415], and [6417].

To build the Logic 1 expression using the default selection in menu [6211], the execution order is as follows:

1. Input 1 is combined with Input 2 using Operator 1.
2. Input 3 is combined with the expression (1.2), using Operator 2.
3. Input 4 is combined with the result of (1.2).3, using Operator 3.

The alternative execution order leads to:

1. Input 1 is combined with Input 2 using Operator 1.
2. Input 3 is combined with Input 4 using Operator 3.
3. Expression (1.2) is combined with expression (3.4), using Operator 2.

Example

Input 1 [6412]

Input 2 = F1, menu [6414]

Input 3 = T1Q, menu [6416]

Input 4 = NOT1, menu [631]

In case NOT1 is configured to CA2 the output of the NOT1 gate will be the inverse of CA2 i.e. !CA2.

Operator 1 = & (AND), set in menu [6413]

Operator 2 = + (OR), menu [6415]

Operator 3 = & (AND), menu [6417]

The following expression is created, using the menus above:

CA1&F1+T1Q&NOT1

With the default setting for L1 Expression this is representing:

((CA1&F1)+T1Q)&NOT1

Let's use the following values on the input signals as an example:

CA1=1 (active/high)

F1= 1 (active/high)

T1Q = 1 (active/high)

NOT1 = 0 (inactive/low)

With the respective values inserted the resulting logic expression is:

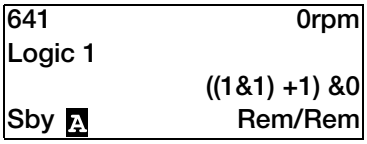

which is equal to 0.

With the alternative execution order for the L1 Expression this is representing:

(CA1&F1)+(T1Q&NOT1)

With the above values inserted the resulting logic expression now becomes:

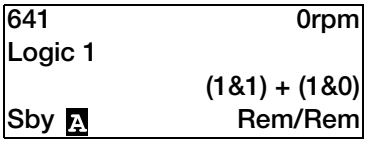

which is equal to 1.

Logic 1 Input 1 [6412]

In this menu the first input for the Logic 1 function is selected. The same selections are valid for [6414] L1 Input 2, [6416] L1 Input 3, and [6418] L1 Input 4.
See Chapter 15. page 263.

6412 L1 Input 1	
Default:	CA1
Selection:	Same as in menu DigOut 1 [541].

Logic 1 Operator 1 [6413]

In this menu the first operator for the Logic 1 function is selected.

6413 L1 Op 1		
Default:		&
.	0	When . (dot) is selected, the Logic 1 expression is finished (when two or three expressions are tied together).
&	1	&=AND
+	2	+=OR
^	3	^=EXOR

Logic 1 Input 2 [6414]

In this menu the second input for the Logic 1 function is selected.

6414 L1 Input 2	
Default:	NOT1
Selection:	Same as in menu DigOut 1 [541].

Logic 1 Operator 2 [6415]

In this menu the second operator for the Logic 1 function is selected.

6415 L1 Op 2	
Default:	&
Selection	Same as in menu L1 Op 1 [6413].

Logic 1 Input 3 [6416]

In this menu the third input for the Logic 1 function is selected.

6416 L1 Input 3	
Default:	Run
Selection:	Same as in menu DigOut 1 [541].

Logic 1 Operator 3 [6417]

In this menu the third operator for the Logic 1 function is selected.

6417 L1 Op 3	
Default:	.
Selection:	Same as in menu L1 Op 1 [6413].

Logic 1 Input 4 [6418]

In this menu the fourth input for the Logic 1 function is selected.

6418 L1 Input 4	
Default:	Off
Selection:	Same as in menu DigOut 1 [541].

Logic 1 Set Delay [6419]

The activation of the output signal for the Logic 1 function is delayed with the set value in this menu. Compare to chapter, Set/reset delay for output signal..

6419 L1 Set Dly	
Default:	0.0 s
Range:	0 - 36000.0 s

Logic 1 Reset Delay [641A]

The reset of the output signal for the Logic 1 function is delayed with the set value in this menu. Compare to fchapter, Set/reset delay for output signal..

641A	L1 Res Dly
Default:	0.0 s
Range:	0 - 36000.0 s

Logic 1 Timer Value [641B]

The actual timer value for logic 1 is viewed in this menu.

641B	L1 Tmr Val
Default:	0.0 s
Range:	0 - 36000.0 s

Logic 2 - 4 [642] - [644]

Refer to the descriptions for Logic 1. For default values see Chapter 15. page 263.

11.8.5 Timers [650]

The Timer functions can be used as a delay timer or as an interval with separate “on” and “off” times (alternate mode), or as a way to prolong a signal (on-time mode). The selected trigger signal starts the timer function, and the signal is converted according to the mode settings, resulting in the timer output signal (T1Q - T4Q). In “Delay” mode, the output signal T1Q becomes high if the set delay time is expired. See fig. 151.

In “Delay” mode, the activation of the timer output signal will be delayed in comparison to the trigger signal. The timer output signal is activated (high) when the set delay time has expired. See fig. 151. The timer output signal will however follow the trigger signal when this is deactivated (low) again.

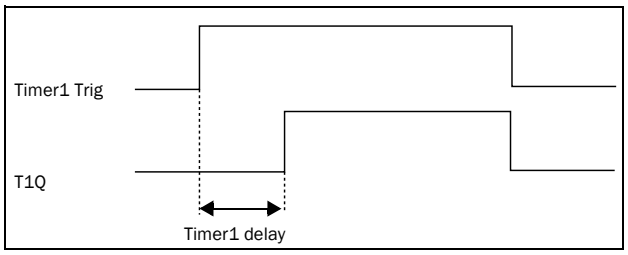

Fig. 151 Delay timer mode.

In alternate mode, the output signal T1Q will switch automatically from high to low etc. according to the set interval times “Timer1 T1” and “Timer 1 T2”. See fig. 152.

The output signal can be programmed to the digital or relay outputs used in logic functions [600] or as a virtual connection source [560].

NOTE: The actual timers are common for all parameter sets. If the actual set is changed, the timer functionality [641] to [645] will change according set settings but the timer value will stay unchanged. So initialization of the timer might differ for a set change compared to normal triggering of a timer.

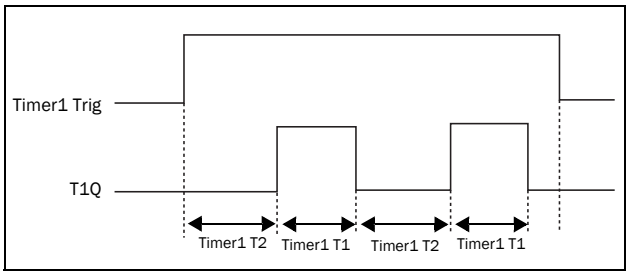

Fig. 152 Alternative timer mode

The function of the “On-time” mode is to extend an activated (high) timer output signal in comparison to the trigger signal. See Fig. 153.

- Output goes high when in signal goes high (positive edge trigged)
- Output stays high for configured time.
- If new positive edge is detected during configured on-time the elapsed time is reset.
- In case the in signal stays high longer than configured time output is kept high as long as in signal is active.

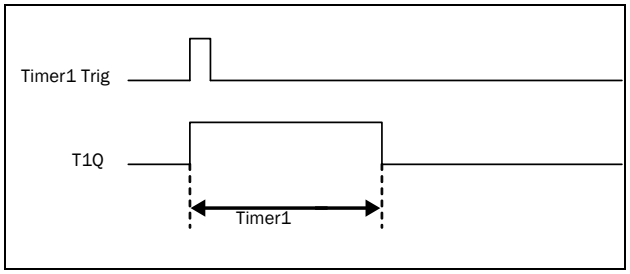

Fig. 153 On-time timer mode.

The timer output signals (T1Q - T4Q) can be programmed to the relay outputs used in logic functions [620], or be used as a virtual connection source [560].

NOTE: The actual timers are common for all parameter sets. If the actual parameter set is changed, the timer functionality will change according to the settings, but the timer value will stay unchanged. So initialisation of the timer might differ for a set change compared to normal triggering of a timer.

Timer 1 [651]

Parameter group for Timer 1.

Timer 1 Trig [6511]

Selection of the Timer input trigger signal

Timer 1 can be activated by a high signal on a DigIn that is set to Timer 1 or via a virtual destination [560].

6511	Timer1 Trig
Default:	Off
Selection:	Same as in menu DigOut 1 [541].

Timer 1 Mode [6512]

Selection of mode of operation for Timer 1.

6512	Timer1 Mode	
Default:		Off
Off	0	Timer is disabled
Delay	1	Output signal will be delayed in comparison to the trigger signal.
Alternate	2	Timer output will automatically keep on switching according to the independently programmable on and off times as long as it is triggered.
On-time	3	Timer output will extend the trigger signal according to configured on-time.

Timer 1 Delay [6513]

This menu is only visible when timer mode is set to delay.

This menu can only be edited as in alternative 2, see section 10. page 87.

Timer 1 delay sets the time that will be used by the first timer after it is activated.

6513	Timer1Delay
Default:	0.0 s
Range:	0 - 36000.0 s

Timer 1 T1 [6514]

This menu is only visible when timer mode is set to Alternate or On-time.

Timer 1 T1 sets the on time in both modes.

6514	Timer1 T1
Default:	0.0 s
Range:	0 - 36000.0 s

Timer 1 T2 [6515]

Timer 1 T2 sets the off time in the alternate mode.

6515	Timer1 T2
Default:	0.0 s
Range:	0 - 36000.0 s

NOTE: “Timer 1 T1 [6514]” and “Timer 1 T2 [6515]” are only visible when Timer Mode is set to Alternate.

Timer 1 Actual Value [6516]

Timer 1 Value shows actual value of the timer.

6516	Timer1Value
Default:	0.0 s
Range:	0 - 36000.0 s

Timer 2 - Timer 4 [652] - [654]

Refer to the description for Timer 1 [651].

11.8.6 Flip flops [660]

The flip-flop function is a memory circuit that can be used to store data concerning state. The output from a flip-flop is dependent not only on its current input, but also on its state at the moment this is received (hence previous input status also matters).

The set/reset flip-flop circuit has two input signals, SET and RESET, that control the state of an output signal, OUT. When none of the input signals are active (i.e. both are =0), the flip-flop will keep its current value. Changes of the flip-flop state always occur on the rising edge of one of its inputs.

When only one of the input signals becomes active (=1), this will directly decide the status of the output signal. Consequently if SET becomes active and RESET is inactive, the SET command is given to the output signal, OUT. This will result in a signal change from inactive to active (=1), if not already in an active state.

Conversely, if SET is inactive and RESET becomes active, the RESET command is given to the output signal, OUT, causing this to be deactivated (=0).

When both of the inputs signals becomes active the resulting operation depends on the configured Flip-flop priority mode as explained below.

Flip-flop priority mode

When both input signals becomes active simultaneously, i.e. both SET and RESET are =1, a priority function decides which signal will influence the output signal. There are three different priority settings available for the flip-flop function, selected in the menu for "Flip-flop Mode". Examples of the different priority settings are presented in fig. 154.

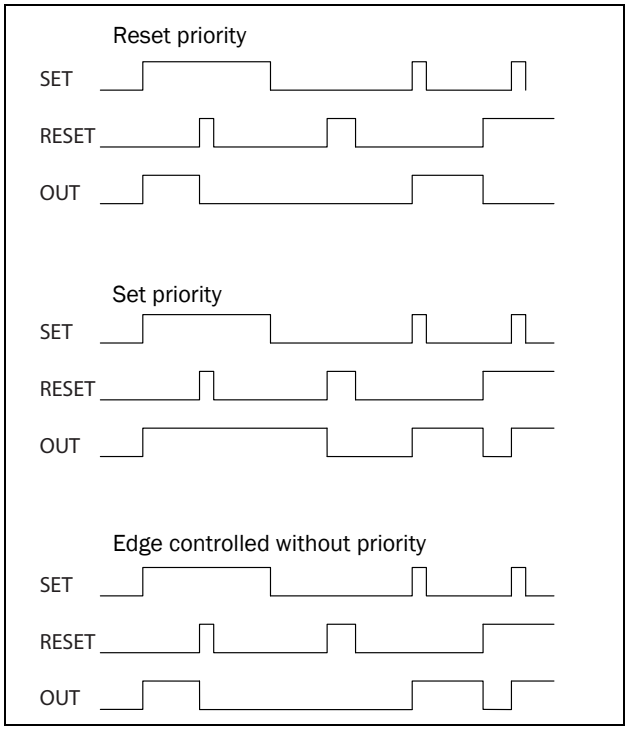

Fig. 154 Programmable flip-flop modes.

Reset priority

"Reset priority" means that if both input signals becomes active, it will be the RESET command that is obeyed, causing the output signal to become inactive (=0) on the rising edge of RESET, as can be seen in fig. 154 If RESET comes first OUT remain inactive when later SET signal becomes active. If SET comes first OUT will turn inactive upon the rising edge of RESET.

Set priority

For "Set priority" the determining input signal is SET. Should both input signals become active, this is resulting in an activated (=1) output signal on the rising edge of SET, as can be seen in fig. 154. If SET comes first OUT will remain active when later RESET signal becomes active. If RESET comes first OUT will turn active upon the rising edge of SET.

Edge controlled without priority

The third setting is “Edge controlled”, for which no input signal has priority over the other. The output signal follows any of the two input signals (still providing they are at a positive edge). The most recent registered activity decides the output. See table 43.
Should both inputs become activated simultaneously, there will not be any change; the output signal will just keep its earlier status.

NOTE: The input signals are updated in intervals of 8 milliseconds, therefore the signal changes are considered simultaneous if the difference is less than 8 ms.

Table 43 Truth table for Edge control without priority.

SET	RESET	OUT
0	0	- (no change)
↗1	0/1	1 (set)
0/1	↗1	0 (reset)
↗1	↗1	No change

Flip flop 1 [661]

Function for SR flip-flop 1.

Flip flop 1 mode [6611]

Priority setting of input signals for flip-flop 1.

6611 F1 mode		
Default:		Reset
Reset	0	Reset priority.
Set	1	Set priority.
Edge	2	Edge controlled without priority.

Flip flop 1 set [6612]

Selection of SET input signal for flip-flop 1.

6612 F1 set	
Default:	Off
Selection:	Same as in menu DigOut 1 [541].

Flip flop 1 reset [6613]

Selection of RESET input signals for flip-flop 1.

6613 F1 reset	
Default:	Off
Selection:	Same as in menu DigOut 1 [541].

Flip flop 1 set delay [6614]

The SET input signal for flip-flop 1 is delayed with the set value in this menu.

6614 F1 set Dly	
Default:	0.0 s
Selection:	0 - 36000.0 s

Flip flop 1 reset delay [6615]

The RESET input signal for flip-flop 1 is delayed with the set value in this menu.

6615 F1 res Dly	
Default:	0.0 s
Selection:	0 - 36000.0 s

Flip flop 1 timer value [652]

This menu shows the actual value of the flip flop 1 timer.

6616 F1 Tmr Val	
Default:	0.0 s
Selection:	0 - 36000.0 s

Flip flop 2 - 4 [662] - [664]

Refer to the description for Flip Flop 1[661].

Counters [670]

Counter functions for counting pulses and signalling on digital output when counter reaches specified high and low limit levels.
The counter is counting up on positive flanks on the triggered signal, the counter is cleared as long as the Reset signal is active.
The counter can be automatically decremented with specified decrement time, if no new trigger signal has occurred within the decrement time.
The counter value is clamped to the high limit value and the digital output function (C1Q or C2Q) is active when counter value equals high limit value.
See fig. 155 for more information of the counters.

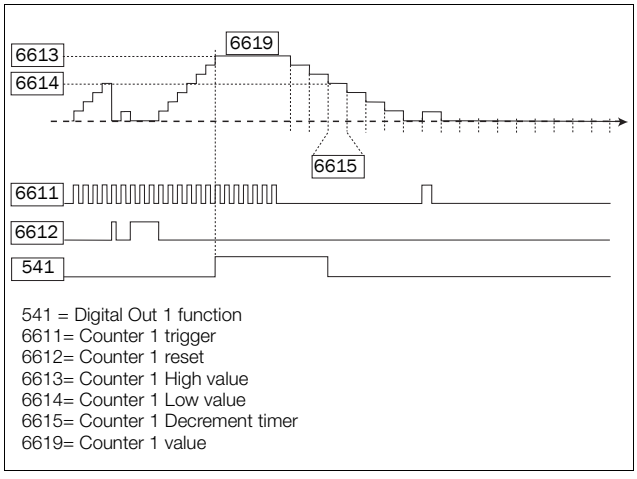

Fig. 155 Counters, operating principle.

Counter1 [671]

Counter 1 parameter group.

Counter 1 Trigger [6711]

Selection of the digital output signal used as trigger signal for counter 1. Counter 1 is incremented by 1 on every positive flank on the trigger signal.

NOTE: Maximum counting frequency is 8 Hz.

6711	C1 Trig
Default:	Off
Selection:	Same as in menu DigOut 1 [541].

Counter 1 Reset [6712]

Selection of the digital signal used as reset signal for counter 1. Counter 1 is cleared to 0 and held to 0 as long as reset input is active (high).

NOTE: Reset input has top priority.

6712	C1 Reset
Default:	Off
Selection:	Same as in menu DigOut 1 [541].

Counter 1 High value [6713]

Sets counter 1 high limit value. Counter 1 value is clamped to selected high limit value and the counter 1 output (C1Q) is active (high) when the counter value equals the high value.

NOTE: Value 0 means that counter output is always true (high).

6713	C1 High Val
Default:	0
Range:	0 - 10000

Counter 1 Low value [6714]

Sets counter 1 low limit value. Counter 1 output (C1Q) is de-activated (low) when the counter value is equal or smaller than the low value.

NOTE: Counter high value has priority so if high and low values are equal then the counter output is de-activated when the value is smaller than the low value.

6714	C1 Low Val
Default:	0
Range:	0 - 10000

Counter 1 Decrement timer [6715]

Sets counter 1 automatic decrement timer value. The counter 1 is decremented by 1 after elapsed decrement time and if no new trigger has happened within the decrement time. The decrement timer is reset to 0 at every counter 1 trig pulse.

6715	C1 DecTimer	
Default:		Off
Off	0	Off
1 - 3600	1 - 3600	1 - 3600 s

Counter 1 Value [6719]

Parameter shows the actual value of counter 1.

NOTE: Counter 1 value is common for all parameter sets.

NOTE: The value is volatile and lost at power down.

6719	C1 Value
Default:	0
Range:	0 - 10000

Counter2 [672]

Refer to description for Counter 1 [671].

Counter 2 Trigger [6721]

Function is identical to Counter 1 Trigger [6711].

6721	C2 Trig
Default:	Off
Selection:	Same as in menu DigOut 1 [541].

Counter 2 Reset [6722]

Function is identical to Counter 1 Reset [6712].

6722	C2 Reset
Default:	Off
Selection:	Same as in menu DigOut 1 [541].

Counter 2 High value [6723]
Function is identical to Counter 1 High value [6713].

6723	C2 High Val
Default:	0
Range:	0 - 10000

Counter 2 Low value [6724]
Function is identical to Counter 1 Low value [6714].

6724	C2 Low Val
Default:	0
Range:	0 - 10000

Counter 2 Decrement timer [6725]
Function is identical to Counter 1 Decrement timer [6715].

6725	C2 DecTimer	
Default:		Off
Off	0	Off
1 - 3600	1 - 3600	1 - 3600 s

Counter 2 Value [6729]
Parameter shows the actual value of counter 2.

NOTE: Counter 2 value is common for all parameter sets.

NOTE: The value is volatile and lost at power down.

6729	C2 Value
Default:	0
Range:	0 - 10000

11.8.7 Clock Logic [680]
Group 670 if only available if the drive is equipped with a 4-line type Control panel (incl. RTC).
There are two Clock functions, Clock 1 and Clock 2. Each clock with separate settings for Time on, Time Off, Date on, Date Off and Weekday. These clocks can be used for activating/deactivating desired functions via Relay, digital output or Virtual I/O (For example creating start and stop commands).

Clock 1 [681]
The time, date and weekday for clock 1 are set in these submenus.

681	Clock 1

Clock 1 Time On [6811]
Time when the clock 1 output signal (CLK1) is activated.

6811	Clk1TimeON
Default:	00:00:00 (hh:mm:ss)
Range:	0:00:00–23:59:59

Clock 1 Time Off [6812]
Time when the clock 1output signal (CLK1) is deactivated.

6812	Clk1TimeOff
Default:	00:00:00 (hh:mm:ss)
Range:	0:00:00–23:59:59

Clock 1 Date On [6813]
Date when the clock 1 output signal (CLK1) is activated.

6813	Clk1DateOn
Default:	2000-00-00
Range:	yyyy-mm-dd (year-month-day)

Clock 1 Date Off [6814]
Date when the clock output signal (CLK1) is deactivated. Note that if “Clk1DateOff” is set to an earlier date than “Clk1DateOn”, the result will be that the clock is not deactivated at the set date.

6814	Clk1DateOff
Default:	2000-00-00
Range:	yyyy-mm-dd (year-month-day)

Clock 1 Weekday [6815]

Weekdays when the clock function is active. Having entered the editing mode, select or unselect the desired weekdays with the cursor using the PREV and NEXT keys on the control panel. Confirm by pressing ENTER. Exit the editing mode and the activated weekdays will be viewed in the menu display. The deactivated weekdays are replaced by a dash mark "-" (e.g. "MTWTF - -").

6815	Clk1Weekday
Default:	MTWTFSS (all activated)
Range:	Monday, Tuesday, Wednesday, Thursday, Friday, Saturday, Sunday.

NOTE: Please make sure that the correct time and date settings are done for the real time clock, menu group [930] "Clock".

Example 1:
The output CLK1 shall be active Mondays to Fridays on working hours, e.g. 08:00-17:00. This signal is used to start e.g. a fan with virtual I/O.

Menu	Text	Setting
6811	Clk1TimeOn	08:00
6812	Clk1TimeOff	17:00
6813	Clk1DateOn	2017-02-01 (date in the past)
6814	Clk1DateOff	2099-12-31 (Date in the future)
6815	Clk1Weekday	MTWTF- -
561	VIO 1 Dest	Run FWD
562	VIO 1 Source	Clk1

Example 2:
The output CLK1 shall be active on weekends, all day.

Menu	Text	Setting
6811	Clk1TimeOn	0:00:00
6812	Clk1TimeOff	23:59:59
6813	Clk1DateOn	2017-02-01 (date in the past)
6814	Clk1DateOff	2099-12-31 (Date in the future)
6815	Clk1Weekday	- - - - - SS
561	VIO 1 Dest	Run FWD
562	VIO 1 Source	Clk1

Clock 2 [682]

Refer to the description for Clock 1 [681].

11.9 View Operation/Status [700]

Menu with parameters for viewing all actual operational data, such as speed, torque, power, etc.

11.9.1 Operation [710]

Process Value [711]

The process value is showing the process actual value, depending on selection done in chapter, Process Source [321].

711	Process Val
Unit	Depends on selected Pocess source [321] and Process Unit [322].
Resolution	Speed: 1 rpm, 4 digits Other units: 3 digits

Communication information

Modbus Instance no/DeviceNet no:	31001
Profibus slot/index	121/145
EtherCATand CANopen index (hex)	23e9
Profinet IO index	1001
Fieldbus format	Long, 1=1rpm, 1%, 1°C or 0.001 if Process Value/ Process Ref using a [322] unit
Modbus format	EInt

Speed [712]

Displays the actual shaft speed.

712	Speed
Unit:	rpm
Resolution:	1 rpm, 4 digits

Communication information

Modbus Instance no/DeviceNet no:	31002
Profibus slot/index	121/146
EtherCAT and CANopen index (hex)	23ea
Profinet IO index	1002
Fieldbus format	Int, 1=1 rpm
Modbus format	Int, 1=1 rpm

NOTE: If accessed via communication, the signal is unreliable at speeds outside -32768 ... 32767.

Torque [713]

Displays the actual shaft torque.

713	Torque
Unit:	%, Nm
Resolution:	1 %, 0.1 Nm

Communication information

Modbus Instance no/DeviceNet no:	31003 Nm 31004 %
Profibus slot/index	121/147 121/148
EtherCAT and CANopen index (hex)	23eb Nm 23ec %
Profinet IO index	1003 Nm 1004 %
Fieldbus format	Long, 1=0.1 Nm Long, 1=1 %
Modbus format	Elnt

Shaft power [714]

Displays the actual shaft power. Negative sign is used when the shaft is generating mechanical power to the motor.

714	Shaft Power
Unit:	W
Resolution:	1W

Communication information

Modbus Instance no/DeviceNet no:	31005
Profibus slot/index	121/149
EtherCAT and CANopen index (hex)	23ed
Profinet IO index	1005
Fieldbus format	Long, 1=1W
Modbus format	Elnt

Electrical Power [715]

Displays the actual electrical output power. Negative sign is used when the motor is generating electrical power to the drive unit.

715	El Power
Unit:	kW
Resolution:	1 W

Communication information

Modbus Instance no/DeviceNet no:	31006
Profibus slot/index	121/150
EtherCAT and CANopen index (hex)	23ee
Profinet IO index	1006
Fieldbus format	Long, 1=1W
Modbus format	Elnt

Current [716]

Displays the actual output current.

716	Current
Unit:	A
Resolution:	0.1 A

Communication information

Modbus Instance no/DeviceNet no:	31007
Profibus slot/index	121/151
EtherCAT and CANopen index (hex)	23ef
Profinet IO index	1007
Fieldbus format	Long, 1=0.1 A
Modbus format	Elnt

Output Voltage [717]

Displays the actual output voltage.

717	Output Volt
Unit:	V
Resolution:	0.1 V

Communication information

Modbus Instance no/DeviceNet no:	31008
Profibus slot/index	121/152
EtherCAT and CANopen index (hex)	23f0
Profinet IO index	1008
Fieldbus format	Long, 1=0.1 V
Modbus format	Elnt

Frequency [718]

Displays the actual output frequency.

718	Frequency
Unit:	Hz
Resolution:	0.1 Hz

Communication information

Modbus Instance no/DeviceNet no:	31009
Profibus slot/index	121/153
EtherCAT and CANopen index (hex)	23f1
Profinet IO index	1009
Fieldbus format	Long, 1=0.1 Hz
Modbus format	EInt

DC Link Voltage [719]

Displays the actual DC link voltage.

719	DC Voltage
Unit:	V
Resolution:	0.1 V

Communication information

Modbus Instance no/DeviceNet no:	31010
Profibus slot/index	121/154
EtherCAT and CANopen index (hex)	23f2
Profinet IO index	1010
Fieldbus format	Long, 1=0.1 V
Modbus format	EInt

IGBT Temperature [71A]

Displays the actual IGBT temperature, measured. The signal is generated by a sensor in the IGBT module.

71A	IGBT Temp
Unit:	°C
Resolution:	0.1°C

Communication information

Modbus Instance no/DeviceNet no:	31011
Profibus slot/index	121/155
EtherCAT and CANopen index (hex)	23f3
Profinet IO index	1011
Fieldbus format	Long, 1=0.1 °C
Modbus format	EInt

PT100_1_2_3 Temp [71B]

Displays the actual PT100 temperature, for PT100 board 1.

71B	PT100 1,2,3
Unit:	°C
Resolution:	1°C

Communication information

Modbus Instance no/DeviceNet no:	31012, 31013, 31014
Profibus slot/index	121/156 121/157 121/158
EtherCAT and CANopen index (hex)	23f4, 23f5, 23f6
Profinet IO index	1012, 1013, 1014
Fieldbus format	Long, 1=1 °C
Modbus format	EInt

PT100_4_5_6 Temp[71C]

Displays the actual PT100 temperature, for PT100 board 2.

71C	PT100 4,5,6
Unit:	°C
Resolution:	1°C

Communication information

Modbus Instance no/DeviceNet no:	31097, 31098, 31099
Profibus slot/index	121/241 121/242 121/243
EtherCAT and CANopen index (hex)	2449, 244a, 244b
Profinet IO index	1097, 1098, 1099
Fieldbus format	Long, 1=1 °C
Modbus format	EInt

11.9.2 Status [720]

Frequency Inverter Status [721]

Indicates the overall status of the AC drive.

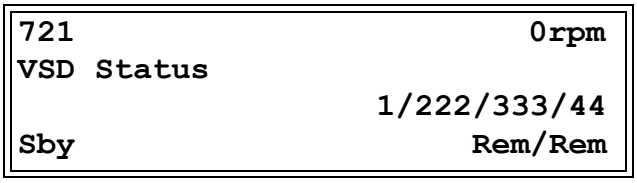

Fig. 156 AC drive status

Display position	Function	Status value
1	Parameter Set	A,B,C,D
222	Source of reference value	-Rem (remote) -Key (keyboard) -Com (Serial comm.) -Opt (option)
333	Source of Run/ Stop command	-Rem (remote) -Key (keyboard) -Com (Serial comm.) -Opt (option)
44	Limit functions	- - - -No limit active -VL (Voltage Limit) -SL (Speed Limit) -CL (Current Limit) -TL (Torque Limit)

Example: “A/Key/Rem/TL”

This means:

A: Parameter Set A is active.

Key: Reference value comes from the keyboard (CP).

Rem: Run/Stop commands come from terminals 1-22.

TL: Torque Limit active.

Communication information

Modbus Instance no/DeviceNet no:	31015
Profibus slot/index	121/159
EtherCAT and CANopen index (hex)	23f7
Profinet IO index	1015
Fieldbus format	UInt
Modbus format	UInt

Description of communication format

Integer values and bits used

Bit	Integer representation
1 - 0	Active Parameter set, where 0=A, 1=B, 2=C, 3=D
4 - 2	Source of Reference control value, where 0=Rem, 1=Key, 2=Com, 3=Option
7 - 5	Source of Run/Stop/Reset command, where 0=Rem, 1=Key, 2=Com, 3=Option
13 - 8	Active limit functions, where 0=No limit, 1=VL, 2=SL, 3=CL, 4=TL
14	Inverter is in warning (A warning condition is active)
15	Inverter is tripped (A Trip condition is active)

Example:
Previous example “A/Key/Rem/TL”
is interpreted “0/1/0/4”
In bit format this is presented as

Bit	Interpretation	Integer representation	
0 LSB	0	A(0)	Parameter set
1	0		
2	1	Key (1)	Source of control
3	0		
4	0		
5	0	Rem (0)	Source of command
6	0		
7	0		
8	0	TL (4)	Limit functions
9	0		
10	1		
11	0		
12	0		
13	0		
14	0		Warning condition
15 MSB	0		Trip condition

In the example above it is assumed that we have no trip or warning condition (the alarm LED on the control panel is off).

Warning [722]

Display the actual or last warning condition. A warning occurs if the AC drive is close to a trip condition but still in operation. During a warning condition the red trip LED will start to blink as long as the warning is active.

```
722                          0rpm
Warning
  Brake                  17:15:38
Sby                      Rem/Rem
```

The active warning message is displayed in menu [722]. If no warning is active the message "No Error" is displayed.

The following warnings are possible:

Communication integer value	Warning message
0	No Error
1	Motor I^2t
2	PTC
3	Motor lost
4	Locked rotor
5	Ext trip
6	Mon MaxAlarm
7	Mon MinAlarm
8	Comm error
9	PT100
11	Pump
12	Ext Mot Temp
13	LC Level
14	Brake
15	Option
16	Over temp
17	Over curr F
18	Over volt D
19	Over volt G
20	Over volt
21	Over speed
22	Under voltage
23	Power fault
24	Desat
25	DClink error
26	Int error
27	Ovolt m cut
28	Over voltage
29	Not used
30	Crane Comm
31	Encoder

Communication information

Modbus Instance no/DeviceNet no:	31016
Profibus slot/index	121/160
EtherCAT and CANopen index (hex)	23f8
Profinet IO index	1016
Fieldbus format	UInt
Modbus format	UInt

See also the Chapter 12. page 225.

Digital Input Status [723]

Indicates the status of the digital inputs. See Fig. 157.

1 DigIn 1
2 DigIn 2
3 DigIn 3
4 DigIn 4
5 DigIn 5
6 DigIn 6
7 DigIn 7
8 DigIn 8

The positions one to eight (read from left to right) indicate the status of the associated input:

1 High

0 Low

The example in Fig. 157 indicates that DigIn 1, DigIn 3 and DigIn 6 are active at this moment.

```
723                          0rpm
DigIn Status
                         10100100
Sby                      Rem/Rem
```

Fig. 157 Digital input status example

Communication information

Modbus Instance no/DeviceNet no:	31017
Profibus slot/index	121/161
EtherCAT and CANopen index (hex)	23f9
Profinet IO index	1017
Fieldbus format	UInt, bit 0=DigIn1, bit 7=DigIn8
Modbus format	

Digital Output Status [724]

Indicates the status of the digital outputs and relays. See Fig. 158.

RE indicate the status of the relays on position:

1 Relay1
2 Relay2
3 Relay3

DO indicate the status of the digital outputs on position:

1 DigOut1
2 DigOut2

The status of the associated output is shown.

1 High
0 Low

The example in Fig. 158 indicates that DigOut1 is active and Digital Out 2 is not active. Relay 1 is active, relay 2 and 3 are not active.

Fig. 158 Digital output status example

Communication information

Modbus Instance no/DeviceNet no:	31018
Profibus slot/index	121/162
EtherCAT and CANopen index (hex)	23fa
Profinet IO index	1018
Fieldbus format	UInt,
Modbus format	bit 0=DigOut1, bit 1=DigOut2 bit 8=Relay1 bit 9=Relay2 bit 10=Relay3

Analogue Input Status [725]

Indicates the status of the analogue inputs 1 and 2.

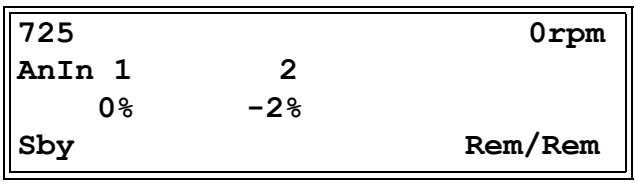

Fig. 159 Analogue input status

Communication information

Modbus Instance no/DeviceNet no:	31019, 31020
Profibus slot/index	121/163, 121/164
EtherCAT and CANopen index (hex)	23fb, 23fc
Profinet IO index	1019, 1020
Fieldbus format	Long, 1=1%
Modbus format	EInt

The first row indicates the analogue inputs.

1 AnIn 1
2 AnIn 2

Reading downwards from the first row to the second row the status of the belonging input is shown in %:

-100% AnIn1 has a negative 100% input value
65% AnIn2 has a 65% input value

So the example in Fig. 159 indicates that both the Analogue inputs are active.

NOTE: The shown percentages are absolute values based on the full range/scale of the in- or output; so related to either 0–10 V or 0–20 mA.

Analogue Input Status [726]

Indicates the status of the analogue inputs 3 and 4.

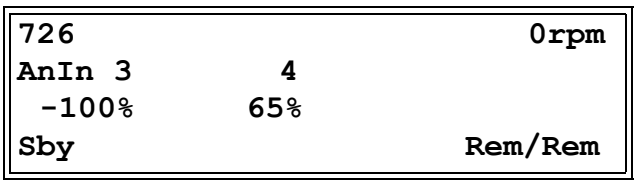

Fig. 160 Analogue input status

Communication information

Modbus Instance no/DeviceNet no:	31021, 31022
Profibus slot/index	121/165, 121/166
EtherCAT and CANopen index (hex)	23fd, 23fe
Profinet IO index	1021, 1022
Fieldbus format	Long, 1=1%
Modbus format	EInt

Analogue Output Status [727]

Indicates the status of the analogue outputs. Fig. 161. E.g. if 4-20 mA output is used, the value 20% equals to 4 mA.

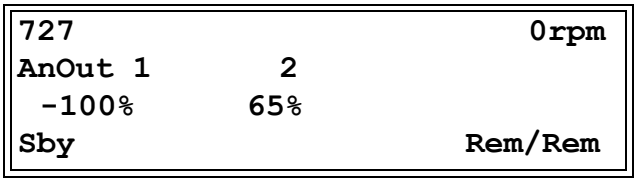

Fig. 161 Analogue output status

Communication information

Modbus Instance no/DeviceNet no:	31023, 31024
Profibus slot/index	121/167, 121/168
EtherCAT and CANopen index (hex)	23ff, 2400
Profinet IO index	1023, 1024
Fieldbus format	Long, 1=1%
Modbus format	Elnt

The first row indicates the Analogue outputs.

1 AnOut 1
2 AnOut 2

Reading downwards from the first row to the second row the status of the belonging output is shown in %:

-100%AnOut1 has a negative 100% output value
65%AnOut2 has a 65% output value

The example in Fig. 161 indicates that both the Analogue outputs are active.

NOTE: The shown percentages are absolute values based on the full range/scale of the in- or output; so related to either 0–10 V or 0–20 mA.

I/O board Status [728] - [72A]

Indicates the status for the additional I/O on option boards 1 (B1), 2 (B2) and 3 (B3).

Communication information

Modbus Instance no/DeviceNet no:	31025 - 31027
Profibus slot/index	121/170 - 172
EtherCAT and CANopen index (hex)	2401 - 2403
Profinet IO index	1025 - 1027
Fieldbus format	Ulnt, bit 0=DigIn1 bit 1=DigIn2 bit 2=DigIn3 bit 8=Relay1 bit 9=Relay2 bit 10=Relay3
Modbus format	

Area D Stat[72B]

These menus are not visible in the control panel display. Only used in EmoSoftCom PC-tool (optional) and can be read via fieldbus or serial communication.

Area D LSB [72B1]

Status bits 0 to 15.
see Chapter 10.2.1 page 87

Communication information

Modbus Instance no/DeviceNet no:	30180
Profibus slot/index	118/89
EtherCAT and CANopen index (hex)	20b4
Profinet IO index	180
Fieldbus format	Ulnt
Modbus format	Ulnt

Area D MSB [72B2]

Status bits 16 and up.
see Chapter 10.2.1 page 87

Communication information

Modbus Instance no/DeviceNet no:	30182
Profibus slot/index	118/91
EtherCAT and CANopen index (hex)	20b6
Profinet IO index	182
Fieldbus format	Ulnt
Modbus format	Ulnt

VIO Status[72C]

Shows the values of the 8 Virtual IO´s in menu[560]

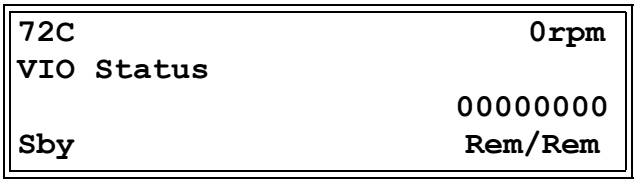

Communication information

Modbus Instance no/DeviceNet no:	30181
Profibus slot/index	118/90
EtherCAT and CANopen index (hex)	20b5
Profinet IO index	181
Fieldbus format	Ulnt
Modbus format	Ulnt

11.9.3 Stored values [730]

The shown values are the actual values built up over time. Values are stored at power down and updated again at power up.

Run Time [731]

Displays the total time that the AC drive has been in the Run Mode.

731	Run Time
Unit:	hh:mm:ss (hours: minutes: seconds)
Range:	00: 00: 00–262143: 59: 59

Communication information

Modbus Instance no/DeviceNet no:	31028:31029:31030 (hr:min:sec)
Profibus slot/index	121/172:121/173: 121/174
EtherCAT and CANopen index (hex)	2404:2405:2406
Profinet IO index	1028:1029:1030
Fieldbus format	Long, 1=1h:m:s
Modbus format	Eint

Reset Run Time [7311]

Reset the run time counter. The stored information will be erased and a new registration period will start.

7311	Reset RunTm	
Default:		No
No	0	
Yes	1	

Communication information

Modbus Instance no/DeviceNet no:	7
Profibus slot/index	0/6
EtherCAT and CANopen index (hex)	2007
Profinet IO index	7
Fieldbus format	UInt
Modbus format	UInt

NOTE: After reset the setting automatically reverts to "No".

Mains time [732]

Displays the total time that the AC drive has been connected to the mains supply. This timer cannot be reset.

732	Mains Time
Unit:	hh:mm:ss (hours: minutes: seconds)
Range:	00: 00: 00–262143: 59: 59

Communication information

Modbus Instance no/DeviceNet no:	31031:31032:31033 (hr:min:sec)
Profibus slot/index	121/175:121/176: 121/177
EtherCAT and CANopen index (hex)	2407 : 2408 : 2409
Profinet IO index	1031:1032:1033
Fieldbus format	Long, 1=1h:m:s
Modbus format	Eint

Energy [733]

Displays the total energy consumption since the last energy reset [7331] took place.

733	Energy
Unit:	Wh (shows Wh, kWh, MWh or GWh)
Range:	0.0–1GWh, Counter will restart at 0 after 1GWh

Communication information

Modbus Instance no/DeviceNet no:	31034
Profibus slot/index	121/178
EtherCAT and CANopen index (hex)	240a
Profinet IO index	1034
Fieldbus format	Long, 1=1 Wh
Modbus format	EInt

Reset Energy [7331]

Resets the energy counter. The stored information will be erased and a new registration period will start.

7331	Rst Energy
Default:	No
Selection:	No, Yes

Communication information

Modbus Instance no/DeviceNet no:	6
Profibus slot/index	0/5
EtherCAT and CANopen index (hex)	2006
Profinet IO index	6
Fieldbus format	UInt
Modbus format	UInt

NOTE: After reset the setting automatically goes back to "No".

11.10 View Trip Log [800]

Main menu with parameters for viewing all the logged trip data. In total the AC drive saves the last 9 trips in the trip memory. When a trip occurs the status menus are copied to the trip message log and here are nine trip message logs [810]–[890]. The trip memory refreshes on the FIFO principle (First In, First Out). When the tenth trip occurs the oldest trip will disappear. At every trip, the actual values of several parameter are stored and available for troubleshooting.

11.10.1 Trip message log with RTC [8x0]

Trip recorded with present Real Time Clock (RTC is mounted in 4-line control panel) are shown with actual time and date.

8x0	<Trip message>
Unit:	yy:mm:dd hh:mm:ss (year:month:day hours:minutes:seconds)
Range:	00: 00: 00–262143: 59: 59

11.10.2 Trip Message log without RTC [8x0]

Trip recorded with no present RTC are shown with the time of the "Run Time [731]" counter at trip occurrence.

After reset of occurred trip, the trip message will disappear and menu [100] will be indicated.

8x0	<Trip message>
Unit:	hh:mm:ss (hours:minutes:seconds)
Range:	00: 00: 00–262143: 59: 59

11.10.3 Trip message log [810]

When a trip occurs the menu will change to menu [810]. After resetting an alarm, the menu will change and show menu [100].

Below two examples of trip messages are shown.

Here the menu shows the date and the real time when the trip occurred.

```
810                          0rpm
Over temp
  2020-01-15               17:15:38
Sby                        Rem/Rem
```

Fig. 162

Here the menu shows the run time when the trip occurred.

```
810                          0rpm
Over temp
                       1396:13:00
Sby                        Rem/Rem
```

Fig. 163

Fig. 163 shows the third trip memory menu [810]: Over temperature trip occurred after 1396 hours and 13 minutes in Run time.

For Fieldbus integer value of trip message, see message table for 722.

NOTE: Bits 0–5 used for trip message value. Bits 6–15 for internal use.

Trip message [811]-[81Q]

The information from the status menus are copied to the trip message log when a trip occurs.

Trip menu	Copied from	Description
811	711	Process Value
812	712	Speed
813	712	Torque
814	714	Shaft Power
815	715	Electrical Power
816	716	Current
817	717	Output voltage
818	718	Frequency
819	719	DC voltage
81A	71A	IGBT Temperature
81B	71B	PT100 1, 2, 3
81C	721	VSD Status
81D	723	Digital input status
81E	724	Digital output status
81F	725	Analogue input status 1-2
81G	726	Analogue input status 3-4
81H	727	Analogue output status 1-2
81I	728	I/O status option board 1
81J	729	I/O status option board 2
81K	72A	I/O status option board 3
81L	731	Run Time
81M	732	Mains Time
81N	733	Energy
81O	310	Set/View ref
81P	72C	VIO Status
81Q	71C	PT100 4, 5, 6

11.10.4 Trip Messages [82P] - [89P]

Same information as for menu [810].

Communication information

Modbus Instance no/ DeviceNet no:	31151–31185 31201–31235 31251–31285 31301–31335 31351–31385 31401–31435 31451–31485 31501–31535	Trip log list 2 3 4 5 6 7 8 9
Profibus slot/index	122/40–122/74 122/90–122/124 122/140–122/174 122/190–122/224 122/240–123/18 123/35 - 123/68 123/85–123/118 123/135–123/168	Trip log list 2 3 4 5 6 7 8 9
EtherCAT and CANopen index (hex)	247e - 24b0 24b1 - 24e2 24e3 - 2514 2515 - 2546 2547 - 2578 2579 - 25aa 25ab - 25dc 25dd - 260e	Trip log list 2 3 4 5 6 7 8 9
Profinet IO index	1151 - 1185 1201 - 1235 1251 - 1285 1301 - 1335 1351 - 1385 1401 - 1435 1451 - 1485 1501 - 1535	Trip log list 2 3 4 5 6 7 8 9
Fieldbus format	See Trip 811 - 81O	
Modbus format		

All nine alarm lists contain the same type of data. For example DeviceNet parameter 31101 in alarm list 1 contains the same data information as 31151 in alarm list 2.

11.10.5 Reset Trip Log [8A0]

Resets the content of the 9 trip memories.

8A0	Reset Trip L	
Default:		No
No	0	
Yes	1	

Communication information

Modbus Instance no/DeviceNet no:	8
Profibus slot/index	0/7
EtherCAT and CANopen index (hex)	2008
Profinet IO index	8
Fieldbus format	UInt
Modbus format	UInt

NOTE: After the reset the setting goes automatically back to "NO". The message "OK" is displayed for 2 sec.

11.11 System Data [900]

Main menu for viewing all the AC drive system data.

11.11.1 VSD Data [920]

VSD Data [921]

Shows the AC drive type according to the type number.

The options are indicated on the type plate of the AC drive.

NOTE: If the control board is not configured, then type shown is SX-_4####-EF.

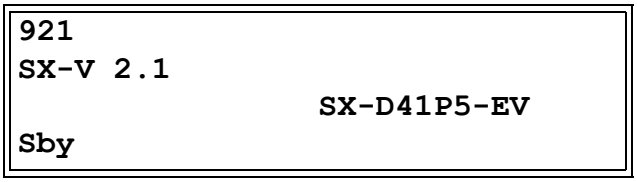

Example of type

Communication information

Modbus Instance no/DeviceNet no:	31037
Profibus slot/index	121/181
EtherCAT and CANopen index (hex)	240d
Profinet IO index	1037
Fieldbus format	UInt, 1=1
Modbus format	UInt

Examples:

SX-4011-EV AC drive-series
- suited for 380-480 volt mains supply, and a
- rated output current of 46 A.
- IP Class = IP54 and IP55 (2X = IP20/21)

Software [922]

Shows the software version number of the AC drive.

Fig. 164 gives an example of the version number.

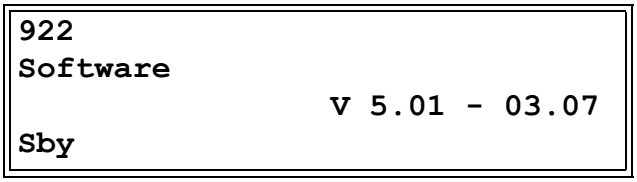

Fig. 164 Example of software version

V 5.01 = Software version

- 03.07 = option version, is only visible and valid for special software, type OEM adapted software.
  03 = (major) special software variant number
  07= (minor) revision of this special software

Communication information

Modbus Instance no/DeviceNet no:	31038 software version 31039 option version
Profibus slot/index	121/182-183
EtherCAT and CANopen index (hex)	240e, 240f
Profinet IO index	1038, 1039
Fieldbus format	UInt
Modbus format	UInt

Table 44 Information for Modbus and Profibus number, software version

Bit	Example	Description
7–0	32	minor
13–8	4	major
15–14		release 00: V, release version 01: P, pre-release version 10: β, Beta version 11: α, Alpha version

Table 45 Information for Modbus and Profibus number, option version

Bit	Example	Description
7–0	07	Minor version
15–8	05	Major version

NOTE: It is important that the software version displayed in menu [922] is the same software version number as the software version number written on the title page of this instruction manual. If not, the functionality as described in this manual may differ from the functionality of the AC drive.

Build Information [9221]

Software version created, Date and time.

```
9221
Build Info
                    200616145041
Sby
```

Default:	YYMMDDHHMMSS (YY=year, MM=month, DD=day, HH=hours, MM=minutes, SS=seconds)

Build ID [9222]

Software identification code.

```
9222
Build ID
                              OE1B7F9E
Sby
```

Example:	0E1B7F9E

Unit name [923]

Option to enter a name of the unit for service use or customer identity. The function enables the user to define a name with max 12 characters. Use the Prev and Next key to move the cursor to the required position. Then use the + and - keys to scroll in the character list. Confirm the character by moving the cursor to the next position by pressing the Next key. See section User-defined Unit [323].

Example

Create user name USER 15.

1. When in the menu [923] press Next to move the cursor to the right most position.
2. Press the + key until the character U is displayed.
3. Press Next.
4. Then press the + key until S is displayed and confirm with Next.
5. Repeat until you have entered USER15.

```
923
Unit Name

Sby
```

Default:	0

Communication information

Modbus Instance no/DeviceNet no:	42301–42312
Profibus slot/index	165/225–236
EtherCAT and CANopen index (hex)	48fd - 4908
Profinet IO index	18685 - 18696
Fieldbus format	UInt
Modbus format	UInt

When sending a unit name you send one character at a time starting at the right most position.

Hardware [924]

CB Key [9241]

Unique identifier of control board; 32 bit hex value.

```
9241
CB Key
                    00DBDA8B
Sby
```

Example:	00DBDA8B

CtrlPanel [925]

This menu and sub menus will be hidden if an older control panel is connected.

Control panel software version [9251]

Shows the software version number of the control panel.

Fig. 164 gives an example of the version number.

```
9251
CP SW ver
                      V 2.00
Sby
```

Fig. 165 Example of software version

V 2.00 = Software version

CP HW ver [9252]

Hardware version of connected control panel.

```
9252
CP HW ver
                        11
Sby
```

CP Build ID [9253]

32 bit hex value of build ID for control panel.

Fig. 166 gives an example of the version number.

```
9253
CP Build ID
                    64A26CE5
Sby
```

Fig. 166 Example of control panel build ID.

11.11.2 Real Time clock

In the 4 line Control panel (PPU) there is a built-in Real time clock. This means that actual date and time will be shown at e.g. a trip condition. There is a built-in capacitor to be able to keep the clock running if the power disappear.

In case of loss of power, the backup time for the Real time clock function is at least 60 days.

Actual date and time will be set from factory. Date and time is shown and can be set in following menus.

Clock [930]

This menu group displays actual time and date, read only. Time and date are factory set to CET (Central European mean time). Adjust if required in following sub-menus.

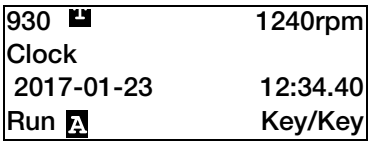

Time [931]

Actual time, displayed as HH:MM:SS. Adjustable setting.

931	Time
Default:	00:00:00 (hh:mm:ss)

Communication information

Modbus Instance no/DeviceNet no:	42601, 42602, 42603 (h,m,s)
Profibus slot/index	167/15, 167/16, 167/17
EtherCAT and CANopen index (hex)	4a29, 4a2a, 4a2b
Profinet IO index	18985, 18986, 18987
Fieldbus format	Long, 1=1 h/m/s
Modbus format	EInt

Date [932]

Actual date, displayed as YYYY-MM-DD. Adjustable setting.

932	Date
Default:	2000-00-00 (yy-mm-dd)

Communication information

Modbus Instance no/DeviceNet no:	42604, 42605, 42606 (Y,M,D)
Profibus slot/index	167/18,167/19, 167/20
EtherCAT and CANopen index (hex)	4a2c, 4a2d, 4a2e
Profinet IO index	18988, 18989, 18990
Fieldbus format	Long, 1=1 Y/M/D
Modbus format	EInt

Weekday [933]

Display of actual weekday, read only.

933		Weekday
Default:		Monday
Monday	0	
Tuesday	1	
Wednesday	2	
Thursday	3	
Friday	4	
Saturday	5	
Sunday	6	

Communication information

Modbus Instance no/DeviceNet no:	42607
Profibus slot/index	167/21
EtherCAT and CANopen index (hex)	4a2f
Profinet IO index	18991
Fieldbus format	Long
Modbus format	EInt

12. Troubleshooting, Diagnoses and Maintenance

12.1 Trips, warnings and limits

In order to protect the AC drive the principal operating variables are continuously monitored by the system. If one of these variables exceeds the safety limit an error/warning message is displayed. In order to avoid any possibly dangerous situations, the inverter sets itself into a stop Mode called Trip and the cause of the trip is shown in the display.

Trips will always stop the AC drive. Trips can be divided into normal and soft trips, depending on the setup Trip Type, see menu "[250] Autoreset". Normal trips are default. For normal trips the AC drive stops immediately, i.e. the motor coasts naturally to a standstill. For soft trips the AC drive stops by ramping down the speed, i.e. the motor decelerates to a standstill.

"Normal Trip"

- The AC drive stops immediately, the motor coasts to a standstill.
- The Trip relay or output is active (if selected).
- The Trip LED is on.
- The accompanying trip message is displayed.
- The "TRP" status indication is displayed (area D of the display).
- After reset command, the trip message will disappear and menu [100] will be indicated.

"Soft Trip"

- the AC drive stops by decelerating to a standstill.

During the deceleration.

- The accompanying trip message is displayed, including an additional soft trip indicator "S" before the trip time.
- The Trip LED is flashing.
- The Warning relay or output is active (if selected).

After standstill is reached.

- The Trip LED is on.
- The Trip relay or output is active (if selected).
- The "TRP" status indication is displayed (area D of the display).
- After reset command, the trip message will disappear and menu [100] will be indicated.

Apart from the TRIP indicators there are two more indicators to show that the inverter is in an "abnormal" situation.

"Warning"

- The inverter is close to a trip limit.
- The Warning relay or output is active (if selected).
- The Trip LED is flashing.
- The accompanying warning message is displayed in window "[722] Warning".
- One of the warning indications is displayed (area F of the display).

"Limits"

- The inverter is limiting torque and/or frequency to avoid a trip.
- The Limit relay or output is active (if selected).
- The Trip LED is flashing.
- One of the Limit status indications is displayed (area D of the display).

Table 46 List of trips and warnings

Trip/Warning messages	Selections	Trip (Normal/ Soft)	Warning indicators (Area D)
Motor I^2t	Trip/Off/Limit	Normal/Soft	I^2t
PTC	Trip/Off	Normal/Soft	
Motor PTC	On	Normal	
PT100	Trip/Off	Normal/Soft	
Motor lost	Trip/Off	Normal	
Locked rotor	Trip/Off	Normal	
Ext trip	Via DigIn	Normal/Soft	
Ext Mot Temp	Via DigIn	Normal/Soft	
Mon MaxAlarm	Trip/Off/Warn	Normal/Soft	
Mon MinAlarm	Trip/Off/Warn	Normal/Soft	
Comm error	Trip/Off/Warn	Normal/Soft	
Encoder	Trip/Off	Normal	
Pump	Via Option	Normal	
Over temp	On	Normal	OT
Over curr F	On	Normal	
Over volt D	On	Normal	
Over volt G	On	Normal	
Over volt	On	Normal	
Under voltage	On	Normal	LV
LC Level	Trip/Off/Warn Via DigIn	Normal/Soft	LCL
Desat ### *	On	Normal	
DClink error	On	Normal	
Power Fault PF #### *	On	Normal	
Ovolt m cut	On	Normal	
Over voltage	Warning		VL
STO Active	Warning		STO
Brake	Trip/Off/Warn	Normal	
OPTION	On	Normal	
Internal error		Normal	

*) Refer to table Table 47regarding which Desat or Power Fault is triggered.

12.2 Trip conditions, causes and remedial action

The table later on in this section must be seen as a basic aid to find the cause of a system failure and to how to solve any problems that arise. An AC drive is mostly just a small part of a complete AC drive system. Sometimes it is difficult to determine the cause of the failure, although the AC drive gives a certain trip message it is not always easy to find the right cause of the failure. Good knowledge of the complete drive system is therefore necessary. Contact your supplier if you have any questions.

The AC drive is designed in such a way that it tries to avoid trips by limiting torque, overvolt etc.

Failures occurring during commissioning or shortly after commissioning are most likely to be caused by incorrect settings or even bad connections.

Failures or problems occurring after a reasonable period of failure-free operation can be caused by changes in the system or in its environment (e.g. wear).

Failures that occur regularly for no obvious reasons are generally caused by Electro Magnetic Interference. Be sure that the installation fulfils the demands for installation stipulated in the EMC directives. See chapter, EMC and standards.

Sometimes the so-called “Trial and error” method is a quicker way to determine the cause of the failure. This can be done at any level, from changing settings and functions to disconnecting single control cables or replacing entire drives.

The Trip Log can be useful for determining whether certain trips occur at certain moments. The Trip Log also records the time of the trip in relation to the run time counter.

WARNING!
If it is necessary to open the AC drive or any part of the system (motor cable housing, conduits, electrical panels, cabinets, etc.) to inspect or take measure-ments as suggested in this instruction manual, it is absolutely necessary to read and follow the safety instructions in the manual.

12.2.1 Technically qualified personnel

Installation, commissioning, demounting, making measurements, etc., of or at the AC drive may only be carried out by personnel technically qualified for the task.

12.2.2 Opening the AC drive

WARNING!
Always switch the mains voltage off if it is necessary to open the AC drive and wait at least 7 minutes to allow the capacitors to discharge.

WARNING!
In case of malfunctioning always check the DC-link voltage, or wait one hour after the mains voltage has been switched off, before dismantling the AC drive for repair.

The connections for the control signals and the switches are isolated from the mains voltage. Always take adequate precautions before opening the AC drive.

12.2.3 Precautions to take with a connected motor

If work must be carried out on a connected motor or on the driven machine, the mains voltage must always first be disconnected from the AC drive. Wait at least 7 minutes before continuing.

12.2.4 Autoreset Trip

If the maximum number of Trips during Autoreset has been reached, the trip message hour counter is marked with an "A".

Fig. 167 Autoreset trip

Fig. 167 shows the 3rd trip memory menu [830]: Overvoltage G trip after the maximum Autoreset attempts took place after 345 hours, 45 minutes and 12 seconds of run time.

Table 47 Trip condition, their possible causes and remedial action

Trip condition	Possible Cause	Remedy	Size**
Motor I^2t "I^2t"	I^2t value is exceeded. - Overload on the motor according to the programmed I^2t settings.	- Check on mechanical overload on the motor or the machinery (bearings, gearboxes, chains, belts, etc.) - Change the Motor I^2t Current setting in menu group [230]	
PTC	Motor thermistor (PTC) exceeds maximum level. **NOTE: Only valid if option board PTC/ PT100 is used.**	- Check on mechanical overload on the motor or the machinery (bearings, gearboxes, chains, belts, etc.) - Check the motor cooling system. - Self-cooled motor at low speed, too high load. - Set PTC, menu [234] to OFF	
Motor PTC	Motor thermistor (PTC) exceeds maximum level. **NOTE: Only valid if [237] is enabled.**	- Check on mechanical overload on the motor or the machinery (bearings, gearboxes, chains, belts, etc.) - Check the motor cooling system. - Self-cooled motor at low speed, too high load. - Set PTC, menu [237] to OFF	0P7 to 55 kW
PT100	Motor PT100 elements exceeds maximum level. **NOTE: Only valid if option board PTC/ PT100 is used.**	- Check on mechanical overload on the motor or the machinery (bearings, gearboxes, chains, belts, etc.) - Check the motor cooling system. - Self-cooled motor at low speed, too high load. - Set PT100 to OFF, menu [234]	
Motor lost	Phase loss or too great imbalance on the motor phases	- Check the motor voltage on all phases. - Check for loose or poor motor cable connections - If all connections are OK, contact your supplier - Set motor lost alarm to OFF.	
Locked rotor	Torque limit at motor standstill: - Mechanical blocking of the rotor.	- Check for mechanical problems at the motor or the machinery connected to the motor - Set locked rotor alarm to OFF.	
Ext trip	External input (DigIn 1-8) active: - active low function on the input.	- Check the equipment that initiates the external input - Check the programming of the digital inputs DigIn 1-8	
Ext Mot Temp	External input (DigIn 1-8) active: - active low function on the input.	- Check the equipment that initiates the external input - Check the programming of the digital inputs DigIn 1-8	
Internal error	Internal alarm	Contact service	
Mon MaxAlarm	Max alarm level (overload) has been reached.	-Check the load condition of the machine -Check the monitor setting in section 11.6.1, page 171.	
Mon MinAlarm	Min alarm level (underload) has been reached.	-Check the load condition of the machine -Check the monitor setting in section 11.6.1, page 171.	

Table 47 Trip condition, their possible causes and remedial action

Trip condition	Possible Cause	Remedy	Size**
Comm error	Error on serial communication (option)	- Check cables and connection of the serial communication. - Check all settings with regard to the serial communication - Restart the equipment including the AC drive	
Encoder	Lost encoder board, encoder cable or encoder pulses. Motor speed deviation in between reference and measured speed detected. **NOTE: Only valid if option board Encoder is used.**	- Check encoder board. - Check encoder cable and signals. - Check motor operation. - Check speed deviation settings [22G#]. - Check speed PI controller settings [37#]. - Check torque limit setting [351] - Disable encoder, set menu [22B] to OFF.	
Pump	No master pump can be selected due to error in feedback signalling. **NOTE: Only used in Pump Control.**	- Check cables and wiring for Pump feedback signals - Check settings with regard to the pump feedback digital inputs	
Over temp	Heatsink temperature too high: - Too high ambient temperature of the AC drive - Insufficient cooling - Too high current - Blocked or stuffed fans	- Check the cooling of the AC drive cabinet. - Check the functionality of the built-in fans. The fans must switch on automatically if the heatsink temperature gets too high. At power up the fans are briefly switched on. - Check AC drive and motor rating - Clean fans	
Over curr F	Motor current exceeds the peak AC drive current: - Too short acceleration time. - Too high motor load - Excessive load change - Soft short-circuit between phases or phase to earth - Poor or loose motor cable connections - Too high IxR Compensation level	- Check the acceleration time settings and make them longer if necessary. - Check the motor load. - Check on bad motor cable connections - Check on bad earth cable connection - Check on water or moisture in the motor housing and cable connections. - Lower the level of IxR Compensation [352]	
Over volt D(eceleration)	Too high DC Link voltage: - Too short deceleration time with respect to motor/machine inertia. - Too small brake resistor malfunctioning Brake chopper	- Check the deceleration time settings and make them longer if necessary. - Check the dimensions of the brake resistor and the functionality of the Brake chopper (if used)	
Over volt G(eneration)			
Over volt (Mains)	Too high DC Link voltage, due to too high mains voltage	- Check the main supply voltage - Try to take away the interference cause or use other main supply lines.	
O(ver) volt M(ains) cut			
Under voltage	Too low DC Link voltage: - Too low or no supply voltage - Mains voltage dip due to starting other major power consuming machines on the same line.	- Make sure all three phases are properly connected and that the terminal screws are tightened. - Check that the mains supply voltage is within the limits of the AC drive. - Try to use other mains supply lines if dip is caused by other machinery - Use the function low voltage override [421]	
LC Level	Low liquid cooling level in external reservoir. External input (DigIn 1-8) active: - active low function on the input. **NOTE:** Only valid for AC drive types with Liquid Cooling option.	- Check liquid cooling - Check the equipment and wiring that initiates the external input - Check the programming of the digital inputs DigIn 1-8	
OPTION	If an Option specific trip occurs	Check the description of the specific option	

Table 47 Trip condition, their possible causes and remedial action

Trip condition	Possible Cause	Remedy	Size**
Desat	Failure in output stage, - desaturation of IGBTs - Hard short circuit between phases or phase to earth - Earth fault - For size B - D also the Brake IGBT	- Check on bad motor cable connections - Check on bad earth cable connections - Check on water and moisture in the motor housing and cable connections - Check that the rating plate data of the motor is correctly entered. - Check the brake resistor, brake IGBT and wiring. - For size G and up, check the cables from the PEBBs to the motor, that all are in correct order in parallell connection	0P7 to 55 kW
Desat U+ *			Above 45 kW
Desat U- *			
Desat V+ *			
Desat V- *			
Desat W+ *			
Desat W- *			
Desat BCC *			
DC link error	DC link voltage ripple exceeds maximum level	- Make sure all three phases are properly connected and that the terminal screws are tightened. - Check that the mains supply voltage is within the limits of the AC drive. - Try to use other mains supply lines if dip is caused by other machinery.	
Power Fault	One of the PF (Power Fault) trips below has occured, but could not be determined.	- Check the PF errors and try to determine the cause. The trip history can be helpful.	
PF Fan Err *	Error in fan module	- Check for clogged air inlet filters in panel door and blocking material in fan module.	Above 45 kW
PF HCB Err*	Error in controlled rectifier module (HCB)	- Check mains supply voltage	Above 30 kW
PF Curr Err *	Error in current balancing: - between different modules. - between two phases within one module.	- Check motor. - Check fuses and line connections - Check the individual motor current leads with an clamp on amp meter.	Above 220 kW
PF Overvolt *	Error in voltage balancing, overvoltage detected in one of the power modules (PEBB)	- Check motor. - Check fuses and line connections.	Above 220 kW
PF Comm Err *	Internal communication error	Contact service	
PF Int Temp *	Internal temperature too high	Check internal fans	
PF Temp Err *	Malfunction in temperature sensor	Contact service	
PF DC Err *	DC-link error and mains supply fault	- Check mains supply voltage - Check fuses and line connections.	Above 30 kW
PF Sup Err *	Mains supply fault	- Check mains supply voltage - Check fuses and line connections.	
PF PBuC*	Powerboard micro controller reset by watchdog.		
Brake	Brake tripped on brake fault (not released) or Brake not engaged during stop.	- Check Brake acknowledge signal wiring to selected digital input. - Check programming of digital input DigIn 1-8, [520]. - Check circuit breaker feeding mechanical brake circuit. - Check mechanical brake if acknowledge signal is wired from brake limit switch. - Check brake contactor. - Check settings [33C], [33D], [33E], [33F].	

* = 2...6 Module number if parallel power units (size 300–3000 A)

** = If no size is mentioned in this column, the information is valid for all sizes.

12.3 Maintenance

The AC drive is designed to require minimum of servicing and maintenance. There are however some things which must be checked regularly in order to optimise product life time.

- Keep the AC drive unit clean and cooling efficient (clean air inlets, heatsink profile, parts, components, etc)
- There is an internal fan that should be inspected and cleaned from dust if necessary.
- If AC drives are built into cabinets, also check and clean the dust filters of the cabinets regularly.
- Check external wiring, connections and control signals.
- Check tightening of all terminal screws regularly, especially important are power and motor cable connections

Preventive maintenance can optimise the product life time and secure trouble free operation without interruptions.

For more information on maintenance, please contact your Omron service partner.

Precautions to take with a connected motor

NOTE: Refer to motor manufacturers instruction manual for motor maintenance requirements.

If work must be carried out on a connected motor or on the driven machine, the mains voltage must always first be disconnected from the drive unit.

13. Options

The standard options available are described here briefly. Some of the options have their own instruction or installation manual. For more information please contact your supplier. See also in “Technical catalogue AC drives” for more info.

13.1 Control panel

Control panel with a 4-line display.

Part number	Description
SX-OP04-00-E	4-line PPU
SX-OP01-00-E	2-line PPU

Fig. 168 Control panel with 4-line display.

The display is back lit and consists of 4 rows, each with space for 20 characters. The Control panel is equipped with real time clock function. This means that actual date and time will be shown at e.g. a trip condition.

13.2 External control panel kits (4-line)

13.2.1 Control panel kit, including blank panel

Part number	Description
SX-OP04K-71-E	Control panel kit (size B)
SX-OP04K-81-E	Control panel kit (size C)
SX-OP04K-51-E	Control panel kit (size D and up)

Fig. 169 Control panel kit, including blank panel.

External control panel IP54 suitable for mounting on a cabinet door. This option is to be used in combination with an AC drive module ordered with a built-in control panel.

13.2.2 Control panel kit, including control panel

Part number	Description
SX-OP04K-00-E	Standard PPU

Fig. 170 Control panel kit, including control panel.

External control panel IP54 suitable for mounting on a panel door. This option is to be used in combination with an AC drive module ordered with a blank control panel.

13.3 control panel

Part number	Description
SX-OP02-00-E	Panel kit complete including panel
SX-OP02-01-E	Panel kit complete including blank panel

Mounting cassette, blank panel and straight RS232-cable are available as options for the control panel. These options may be useful, for example for mounting a control panel in a cabinet door.

Fig. 171 Control panel in mounting cassette

13.4 Handheld Control Panel 2.0

Part number	Description
SX-OPHH-00-E	Handheld Control Panel 2.0 complete for SX-F/SX-V

Fig. 172

The Handheld Control Panel - HCP 2.0 is a complete control panel, easy to connect to the AC drive, for temporary use when e.g. commissioning, servicing and so on.

The HCP has full functionality including memory. It is possible to set parameters, view signals, actual values, fault logger information and so on. It is also possible to use the memory to copy all data (such as parameter set data and motor data) from one AC drive to the HCP and then load this data to other AC drives

Fig. 173

13.5 Gland kits

Gland kits are available for frame sizes B, C and D.

Metal EMC glands are used for motor and brake resistor cables.

Part Number	Current (dimension)	Frame size
01-4601-21	3 - 6 A (M16 - M20)	B
01-4601-22	8 - 10 A (M16 - M25)	
01-4601-23	13 - 18 A (M16 - M32)	
01-4399-01	26 - 31 A (M12 - M32)	C
01-4399-00	37 - 46 A (M12 - M40)	
01-4833-00	61 - 74 A (M20 - M50)	D
01-7248-00	2 - 10 A (M20 - M25)	C69
01-7248-10	13 - 25 A (M20 - M32)	C69
01-7247-00	33 - 58 A (M20 - M40)	D69

13.6 CX-Drive

CX-Drive is an optional software that runs on a personal computer. It can also be used to load parameter settings from the AC drive to the PC for backup and printing. Recording can be made in trace mode. Please contact Omron sales for further information.

13.7 Brake chopper

All AC drive sizes AC drives with cable inlet on short side can be fitted with an optional built-in brake chopper. The brake resistor must be mounted outside the AC drive. The choice of the resistor depends on the application switch-on duration and duty-cycle. This option can not be after mounted.

WARNING!
The table gives the minimum values of the brake resistors. Do not use resistors lower than this value. The AC drive can trip or even be damaged due to high braking currents.

The following formula can be used to define the power of the connected brake resistor:

$$P_{resistor} = \frac{(\text{Brake level } V_{DC})^2}{R_{min}} \text{ x ED}$$

Where:

$P_{resistor}$	required power of brake resistor
Brake level V	brake voltage level (see)
Rmin	minimum allowable brake resistor (see Table 49 and Table 50
ED	effective braking period. Defined as:

$$ED = \frac{t_{br}}{120\ [s]}$$

t_{br}	Active braking time at nominal braking power during a 2 minute operation cycle.

Maximum value of ED = 1, meaning continuous braking.

Table 48

Supply voltage (V_{AC}) (set in menu [21B]	Brake level (V_{DC})
220–240	380
380–415	660
440–480	780
500–525	860
550–600	1000
660–690	1150

Table 49 Brake resistor SX-V_4 V types

Type SX-	Rmin [ohm] if supply 380–415 V_{AC}	Rmin [ohm] if supply 440–480 V_{AC}
D40P7	43	50
D41P5	43	50
D42P2	43	50
D43P0	43	50
D44P0	43	50
D45P5	43	50
D47P5	43	50
A4011	26	30
D4011	26	30
A4015	26	30
D4015	26	30
A4018	17	20
D4018	17	20
A4022	17	20
D4022	17	20
A4030	15.5	19
D4030	10	12
A4037	10	12
D4037	10	12
A4045	7.5	9
D4045	3.8	4.4
A4055	6.5	8
D4055	3.8	4.4
A4075	3.8	4.4
D4075	3.8	4.4
A4090	3.8	4.4
D4090	3.8	4.4
A4110	2.7	3.1
D4110	2.7	3.1
A4132	2.7	3.1
D4132	2.7	3.1
A4160	2.3	2.8
D4160	2.3	2.8
A4200-E3/ D4200-E3	1.8	2.2
A/D4220	2 x 2.7	2 x 3.1
A/D4250	2 x 2.7	2 x 3.1
A/D4315	3 x 2.7	3 x 3.1
A/D4355	3 x 2.7	3 x 3.1
A/D4400	3 x 2.7	3 x 3.1
A/D4450	4 x 2.7	4 x 3.1
A/D4500	4 x 2.7	4 x 3.1
A/D4630	5 x 2.7	5 x 3.1
A/D4710	5 x 2.7	5 x 3.1
A/D4750	6 x 2.7	6 x 3.1
A/D4800	6 x 2.7	6 x 3.1
A/D4900	7 x 2.7	7 x 3.1
A/D41K1	8 x 2.7	8 x 3.1
A/D41K2	9 x 2.7	9 x 3.1
A/D41K4	10 x 2.7	10 x 3.1

Table 50 Brake resistor SX-V_6 V types

Type SX-	Rmin [ohm] if supply 500–525 V_{AC}	Rmin [ohm] if supply 550–600 V_{AC}	Rmin [ohm] if supply 660–690 V_{AC}
61P5	30.4	34.8	40.0
62P2	30.4	34.8	40.0
63P0	30.4	34.8	40.0
64P0	30.4	34.8	40.0
65P5	30.4	34.8	40.0
67P5	30.4	34.8	40.0
6011	30.4	34.8	40.0
6015	30.4	34.8	40.0
6018	30.4	34.8	40.0
6022	30.4	34.8	40.0
6030	12.9	14.8	17.0
6037	12.9	14.8	17.0
6045	12.9	14.8	17.0
6055	12.9	14.8	17.0
6075	4.9	5.7	6.5
6090	4.9	5.7	6.5
6110	4.9	5.7	6.5
6132	4.9	5.7	6.5
6160	4.9	5.7	6.5
6200	4.9	5.7	6.5
6250	2 x 4.9	2 x 5.7	2 x 6.5
6315	2 x 4.9	2 x 5.7	2 x 6.5
6355	2 x 4.9	2 x 5.7	2 x 6.5
6400	2 x 4.9	2 x 5.7	2 x 6.5
6450	3 x 4.9	3 x 5.7	3 x 6.5
6500	3 x 4.9	3 x 5.7	3 x 6.5
6600	3 x 4.9	3 x 5.7	3 x 6.5
6630	4 x 4.9	4 x 5.7	4 x 6.5
6710	4 x 4.9	4 x 5.7	4 x 6.5
6800	4 x 4.9	4 x 5.7	4 x 6.5
6900	5 x 4.9	5 x 5.7	5 x 6.5
61K0	5 x 4.9	5 x 5.7	5 x 6.5
61K2	6 x 4.9	6 x 5.7	6 x 6.5
61K4	7 x 4.9	7 x 5.7	7 x 6.5
61K6	8 x 4.9	8 x 5.7	8 x 6.5
61K8	9 x 4.9	9 x 5.7	9 x 6.5
62K0	10 x 4.9	10 x 5.7	10 x 6.5
62K2	11 x 4.9	11 x 5.7	11 x 6.5
62K4	12 x 4.9	12 x 5.7	12 x 6.5
62K6	13 x 4.9	13 x 5.7	13 x 6.5
62K8	14 x 4.9	14 x 5.7	14 x 6.5
63K0	15 x 4.9	15 x 5.7	15 x 6.5

NOTE: Although the AC drive will detect a failure in the brake electronics, the use of resistors with a thermal overload which will cut off the power at overload is strongly recommended.

The brake chopper option is built-in by the manufacturer and must be specified when the AC drive is ordered.

13.8 I/O Board

Part number	Description
01-3876-01	I/O option board 2.0

Each I/O option board 2.0 provides three extra relay outputs and three extra isolated digital inputs (24V). The I/O Board works in combination with the Pump/Fan Control, but can also be used as a separate option. Maximum 3 I/O boards possible. This option is described in a separate manual.

13.9 Encoder

Part number	Description
01-3876-03	Encoder 2.0 option board

The Encoder 2.0 option board, used for connection of feedback signal of the actual motor speed via an incremental encoder is described in a separate manual.
For Omron SX-V this function is for speed read-out only or for spin start function. No speed control.

13.10 PTC/PT100

Part number	Description
01-3876-08	PTC/PT100 2.0 option board

The PTC/PT100 2.0 option board for connecting motor thermistors and max 3 PT100 elements to the AC drive is described in a separate manual.

13.11 Communication options

Part number	Description	From SX-Vsoftware version (see menu [922])
01-3876-04	RS232/485	4.0
01-3876-05	Profibus DP	4.0
01-3876-06	DeviceNet	4.0
01-3876-09	Modbus/TCP, Industrial Ethernet	4.11
01-3876-10	EtherCAT, Industrial Ethernet	4.32
01-3876-11	Profinet IO, one port Industrial Ethernet	4.32
01-3876-12	Profinet IO, two port Industrial Ethernet	4.32
01-3876-13	EtherNet/IP, two port industrial EtherNet	4.36

For communication with the AC drive there are several option boards for communication. There are different options for Fieldbus communication and one serial communication option with RS232 or RS485 interface which has galvanic isolation.

13.12 Standby supply board with isolated DC-voltage measurement

For all SX-V/SX-F drives specified with the Marine option, the impedance power-to-ground is infinite (requires also drive IT-net configuration). This is achieved by using isolated DC-voltage measurement circuits. For certain drive frame sizes this is done by equipping the drive with a factory mounted "Standby supply board with isolated DC-voltage measurement". This concerns drive frame sizes B-D and F69-T69.

For drives equipped with this Standby supply board it is strongly recommended to connect the external 24 V standby power supply (if used) to this board, terminals X1: +/- instead of connecting it to the control board connector X11.

Supply 24 $V_{DC,}$ ±10%, protected by a 2 A slow acting fuse, from a double isolated transformer. The terminals X1: + and X1: - are voltage polarity dependent.

Cable length limited to 30 m. If the cable is longer than 30 m, a shielded cable must be used.

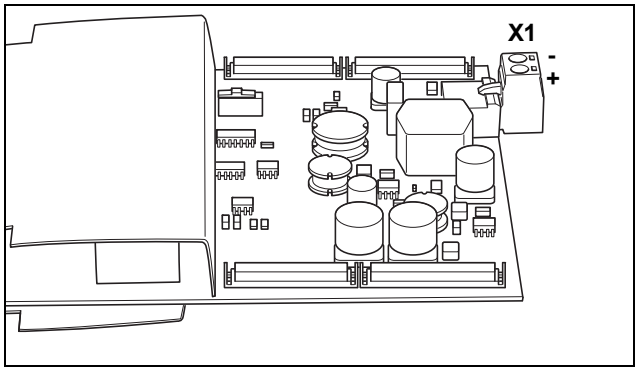

Fig. 174 Standby supply board with isolated DC-voltage measurement, with marine drives frame sizes B-D and F69-T69.

X1 terminal	Name	Function	Specification
+ (left)	+ 24 V	External, AC drive main power independent, supply voltage for control and communication circuits	24 V_{DC} ±10% Double isolated
- (right)	0 V		

13.13 Safe Stop option

- The OSTO_100 option board for safety function Safe Torque Off (STO) is an extension of the Emotron AC drive used for functional safety purposes to achieve e.g. prevention of unexpected startup of motor (POUS) or Emergency stop. This ensures the safety of both the operator and the machinery in accordance with the Machine Directive.
- The Safe Torque Off function works according to the standards EN IEC 61800-5-2:2017, EN IEC 61508:2010, EN ISO 13849-1:2008 and EN IEC 62061:2005.
- For more information please consult "Emotron OSTO_100 option board for safety function Safe Torque Off (STO)" (01-7513-11).

13.14 EMC filter class C1/C2

EMC filter according to EN61800-3:2004 class C1 (for frame size C types) and C2 - 1st environment restricted distribution.
For sizes B,C, C2, D and D2, the filter is mounted inside the drive module.
For sizes E and up, external EMC filters are available.
For more information refer to “Technical catalogue for AC drives”.
Note: EMC filter according to class C3 - 2nd environment included as standard in all drive units.

13.15 Output chokes

Output chokes, which are supplied separately, are recommended for lengths of screened motor cable longer than 100 m. Because of the fast switching of the motor voltage and the capacitance of the motor cable (both line to line and line to earth screen), large switching currents can be generated with long lengths of motor cable. Output chokes prevent the AC drive from tripping and should be installed as closely as possible to the AC drive.
See also in “Technical catalogue AC drives” for filter selection guide.

13.16 Liquid cooling

AC drive modules in frame sizes E - O and F69 - T69 are available in a liquid cooled version. These units are designed for connection to a liquid cooling system, normally a heat exchanger of liquid-liquid or liquid-air type. Heat exchanger is not part of the liquid cooling option.
Drive units with parallel power modules (frame size G - T69) are delivered with a dividing unit for connection of the cooling liquid. The drive units are equipped with rubber hoses with leak-proof quick couplings.
The Liquid cooling option is described in a separate manual.

13.17 Top cover for IP20/21 version

Part number	Description
01-5356-00	Top cover for frame size C2
01-5355-00	Top cover for frame sizes D2, E2 and F2

This Top cover can be mounted on IP20 versions of frame sizes C2, D2, E2 and F2.
By mounting the top cover, the protection class will change to IP21 in accordance with EN 60529 standard.

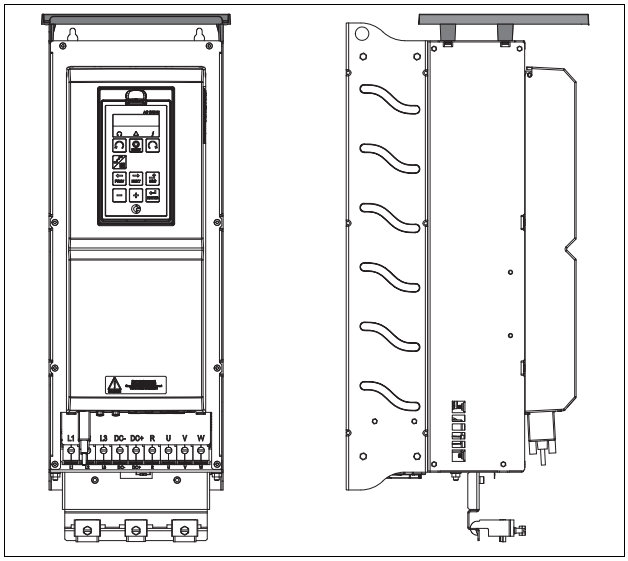

Fig. 175 Optional top cover mounted on frame size D2

13.18 Other options

Following options are also available, for more information regarding these options, see in “Technical catalogue AC drives”.

Overshoot clamp

Sine wave filter

Common mode filter

Brake resistors

13.19 AFE - Active Front End

Omron AC Drives from Omron are also available as Low harmonic drives and Regenerative drives. You will find more information on www.industrial.omron.eu.

14. Technical Data

14.1 Electrical specifications related to model

Note: Use motor rated current for drive sizing.

Omron SX-V - IP20/21 version

Table 51 Typical motor power at mains voltage 230 V. AC drive main voltage range 230 - 480 V.

Model SX-V	Max. output current [A]*	Normal duty (120%, 1 min every 10 min)			Heavy duty (150%, 1 min every 10 min)			Frame size
		Power @230V [kW]	Power @230V [HP]	Rated current [A]	Power @230V [kW]	Power @230V [HP]	Rated current [A]	
48-025-20	30	5.5	7.5	25	4	5	20	C2
48-030-20	36	7.5	10	30	5.5	7.5	24	
48-036-20	43	7.5	10	36	7.5	10	29	
48-045-20	54	11	15	45	7.5	10	36	
48-058-20	68	15	20	58	11	15	46	
48-072-20	86	18.5	25	72	15	20	58	D2
48-088-20	106	22	30	88	18.5	25	70	
48-105-20	126	30	40	105	22	30	84	
48-142-20	170	37	50	142	30	40	114	E2
48-171-20	205	45	60	171	37	50	137	
48-205-20	246	55	75	205	45	60	164	F2
48-244-20	293	75	100	244	55	75	195	
48-293-20	352	90	125	293	75	100	235	
48-365-20	438	110	150	365	90	125	292	FA2

* Available during limited time and as long as allowed by drive temperature.

Table 52 Typical motor power at mains voltage 400 and 460 V. AC drive main voltage range 230 - 480 V.

Model SX-V	Max. output current [A]*	Normal duty (120%, 1 min every 10 min)			Heavy duty (150%, 1 min every 10 min)			Frame size
		Power @400V [kW]	Power @460V [HP]	Rated current [A]	Power @400V [kW]	Power @460V [HP]	Rated current [A]	
48-025-20	30	11	15	25	7.5	10	20	C2
48-030-20	36	15	20	30	11	15	24	
48-036-20	43	18.5	25	36	15	20	29	
48-045-20	54	22	30	45	18.5	25	36	
48-058-20	68	30	40	58	22	30	46	
48-072-20	86	37	50	72	30	40	58	D2
48-088-20	106	45	60	88	37	50	70	
48-105-20	126	55	75	105	45	60	84	
48-142-20	170	75	100	142	55	75	114	E2
48-171-20	205	90	125	171	75	100	137	
48-205-20	246	110	150	205	90	125	164	F2
48-244-20	293	132	200	244	110	150	195	
48-293-20	352	160	250	293	132	200	235	
48-365-20	438	200	300	365	160	250	292	FA2

* Available during limited time and as long as allowed by drive temperature.

.

Table 53 Typical motor power at mains voltage 575 and 690 V. AC drive main voltage range 500 - 690 V.

Model SX-V	Max. output current [A]*	Normal duty (120%, 1 min every 10 min)			Heavy duty (150%, 1 min every 10 min)			Frame size
		Power @575V [hp]	Power @690V [kW]	Rated current [A]	Power @575V [hp]	Power @690V [kW]	Rated current [A]	
A61P5	3.2	1.5	1.5	2	1	0.75	1.6	C2(69)
A62P2	4.8	2	2.2	3	1.5	1.5	2.4	
A63P0	6.4	3	3	4	2	2.2	3.2	
A64P0	9.6	4	4	6	3	3	4.8	
A65P5	12.8	5	5.5	8	4	4	6.4	
A67P5	16	7.5	7.5	10	5	5.5	8	
A6011	20.8	10	11	13	7.5	7.5	10.4	
A6015	29	15	15	18	10	11	14.4	
A6018	34	20	18.5	21	15	15	16.8	
A6022	40	25	22	25	20	18.5	20	
A6030	53	30	30	33	25	22	26	D2(69)
A6037	67	40	37	42	30	30	34	
A6045	80	50	45	50	40	37	40	
A6055	93	60	55	58	40	45	46	

* Available during limited time and as long as allowed by drive temperature.

Omron SX-V - IP54 version (Model 48-300 and up also available as IP20)

Table 54 Typical motor power at mains voltage 230 V. AC drive main voltage range 230 - 480 V.

Model SX-V	Max. output current [A]*	Normal duty (120%, 1 min every 10 min)			Heavy duty (150%, 1 min every 10 min)			Frame size (Number of PEBB´s **)	IP class
		Power @230V [kW]	Power @230V [HP]	Rated current [A]	Power @230V [kW]	Power @230V [HP]	Rated current [A]		
D40P7	3.0	0.37	0.5	2.5	0.37	0.5	2.0	B	IP 54 wall mounted
D41P5	4.8	0.75	1	4.0	0.55	0.75	3.2		
D42P2	7.2	1.1	1.5	6.0	0.75	1	4.8		
D43P0	9.0	1.5	2	7.5	1.1	1.5	6.0		
D44P0	11.4	2.2	3	9.5	1.5	2	7.6		
D45P5	15.6	2.2	3	13.0	2.2	3	10.4		
D47P5	21.6	4	5	18.0	3	3	14.4		
D4011	31	5.5	7.5	26	4	5	21	C	
D4015	37	7.5	10	31	5.5	7.5	25		
D4018	44	7.5	10	37	7.5	10	29.6		
D4022	55	11	15	46	7.5	10	37		
D4030	73	15	20	61	11	15	49	D	
D4037	89	18.5	25	74	15	20	59		
D4045	108	22	30	90	18.5	25	72	E	
D4055	131	30	40	109	22	30	87		
D4075	175	37	50	146	30	40	117		
D4090	210	45	60	175	37	50	140		
D4110	252	55	75	210	45	60	168	F	
D4132	300	75	100	250	55	75	200		
D4160	354	90	125	295	75	100	236		
A/D4200-E3	438	110	150	365	90	125	292	FA	
A/D4220	516	110	150	430	110	125	344	H(2)	IP 20 module or IP54 cabinet
A/D4250	600	160	200	500	110	150	400		
A/D4315	720	200	250	600	132	200	480	I(3)	
A/D4355	780	200	250	650	160	200	520		
A/D4400	900	220	300	750	200	250	600		
A/D4450	1032	250	350	860	220	300	688	J(4)	
A/D4500	1200	300	400	1000	250	350	800		
A/D4630	1380	355	450	1150	250	400	920	KA(5)	
A/D4710	1500	400	500	1250	315	400	1000		
A/D4750	1620	400	550	1350	355	450	1080	K(6)	
A/D4800	1800	450	600	1500	400	500	1200		
A/D4900	2100	560	750	1750	450	600	1400	L(7)	
A/D41K1	2400	630	800	2000	500	650	1600	M(8)	
A/D41K2	2700	710	900	2250	560	750	1800	N(9)	
A/D41K4	3000	800	1000	2500	630	800	2000	O(10)	
Larger sizes available on request									

* Available during limited time and as long as allowed by drive temperature.
** PEBB= Power Electronic Building Block (power module).

Table 55 Typical motor power at mains voltage 400 V. AC drive main voltage range 230 - 480 V.

Model SX-V	Max. output current [A]*	Normal duty (120%, 1 min every 10 min)		Heavy duty (150%, 1 min every 10 min)		Frame size (Number of PEBB´s)**	IP class
		Power @400V [kW]	Rated current [A]	Power @400V [kW]	Rated current [A]		
D40P7	3.0	0.75	2.5	0.55	2.0	B	IP 54 wall mounted
D41P5	4.8	1.5	4.0	1.1	3.2		
D42P2	7.2	2.2	6.0	1.5	4.8		
D43P0	9.0	3	7.5	2.2	6.0		
D44P0	11.4	4	9.5	3	7.6		
D45P5	15.6	5.5	13.0	4	10.4		
D47P5	21.6	7.5	18.0	5.5	14.4		
D4011	31	11	26	7.5	21	C	
D4015	37	15	31	11	25		
D4018	44	18.5	37	15	29.6		
D4022	55	22	46	18.5	37		
D4030	73	30	61	22	49	D	
D4037	89	37	74	30	59		
D4045	108	45	90	37	72	E	
D4055	131	55	109	45	87		
D4075	175	75	146	55	117		
D4090	210	90	175	75	140		
D4110	252	110	210	90	168	F	
D4132	300	132	250	110	200		
D4160	354	160	295	132	236		
A/D4200-E3	438	200	365	160	292	FA	
A/D4220	516	220	430	200	344	H(2)	IP 20 module or IP54 cabinet
A/D4250	600	250	500	220	400		
A/D4315	720	315	600	250	480	I(3)	
A/D4355	780	355	650	315	520		
A/D4400	900	400	750	355	600		
A/D4450	1032	450	860	400	688	J(4)	
A/D4500	1200	560	1000	450	800		
A/D4630	1380	630	1150	500	920	KA(5)	
A/D4710	1500	710	1250	560	1000		
A/D4750	1620	710	1350	600	1080	K(6)	
A/D4800	1800	800	1500	630	1200		
A/D4900	2100	900	1750	800	1400	L(7)	
A/D41K1	2400	1120	2000	900	1600	M(8)	
A/D41K2	2700	1250	2250	1000	1800	N(9)	
A/D41K4	3000	1400	2500	1120	2000	O(10)	
Larger sizes available on request							

* Available during limited time and as long as allowed by drive temperature.
** PEBB= Power Electronic Building Block (power module).

Table 56 Typical motor power at mains voltage 460 V. AC drive main voltage range 230 - 480 V.

Model SX-V	Max. output current [A]*	Normal duty (120%, 1 min every 10 min)		Heavy duty (150%, 1 min every 10 min)		Frame size (Number of PEBB´s)**	IP class
		Power @460V [HP]	Rated current [A]	Power @460V [HP]	Rated current [A]		
D40P7	3.0	1	2.5	1	2.0	B	IP 54 wall mounted
D41P5	4.8	2	4.0	1.5	3.2		
D42P2	7.2	3	6.0	2	4.8		
D43P0	9.0	3	7.5	3	6.0		
D44P0	11.4	5	9.5	3	7.6		
D45P5	15.6	7.5	13.0	5	10.4		
D47P5	21.6	10	18.0	7.5	14.4		
D4011	31	15	26	10	21	C	
D4015	37	20	31	15	25		
D4018	44	25	37	20	29.6		
D4022	55	30	46	25	37		
D4030	73	40	61	30	49	D	
D4037	89	50	74	40	59		
D4045	108	60	90	50	72	E	
D4055	131	75	109	60	87		
D4075	175	100	146	75	117		
D4090	210	125	175	100	140		
D4110	252	150	210	125	168	F	
D4132	300	200	250	150	200		
D4160	354	250	295	200	236		
A/D4200-E3	438	300	365	250	292	FA	
A/D4220	516	350	430	250	344	H(2)	IP 20 module or IP54 cabinet
A/D4250	600	400	500	350	400		
A/D4315	720	500	600	400	480	I(3)	
A/D4355	780	550	650	400	520		
A/D4400	900	600	750	500	600		
A/D4450	1032	700	860	550	688	J(4)	
A/D4500	1200	800	1000	650	800		
A/D4630	1380	900	1150	750	920	KA(5)	
A/D4710	1500	1000	1250	800	1000		
A/D4750	1620	1100	1350	900	1080	K(6)	
A/D4800	1800	1250	1500	1000	1200		
A/D4900	2100	1500	1750	1200	1400	L(7)	
A/D41K1	2400	1700	2000	1300	1600	M(8)	
A/D41K2	2700	1900	2250	1500	1800	N(9)	
A/D41K4	3000	2100	2500	1700	2000	O(10)	
Larger sizes available on request							

* Available during limited time and as long as allowed by drive temperature.
** PEBB= Power Electronic Building Block (power module).

Omron SX-V - IP54 version (Model 69-250 and up also available as IP20)

Table 57 Typical motor power at mains voltage 525 V.
AC drive main voltage range, for SX-V_6: 500 - 690 V.

Model SX-V	Max. output current [A]*	Normal duty (120%, 1 min every 10 min)		Heavy duty (150%, 1 min every 10 min)		Frame size (Number of PEBB´s)**	IP class
		Power @525V [kW]	Rated current [A]	Power @525V [kW]	Rated current [A]		
D6075	98	55	82	45	66	F69	IP 54 wall mounted
D6090	108	55	90	45	72		
D6110	131	75	109	55	87		
D6132	175	90	146	75	117		
D6160	210	110	175	90	140		
D6200	240	132	200	110	160		
A/D6250	300	160	250	132	200	H69 (2)	IP 20 module or IP54 cabinet
A/D6315	360	200	300	160	240		
A/D6355	450	250	375	200	300		
A/D6400	480	250	400	220	320		
A/D6450	516	300	430	250	344	I69 (3)	
A/D6500	600	315	500	300	400		
A/D6600	720	400	600	315	480		
A/D6630	780	450	650	355	520	J69 (4)	
A/D6710	864	500	720	400	576		
A/D6800	960	560	800	450	640		
A/D61K0	1200	630	1000	500	800	KA69 (5)	
A/D61K2	1440	800	1200	630	960	K69 (6)	
A/D61K4	1680	1000	1400	800	1120	L69 (7)	
A/D61K6	1920	1100	1600	900	1280	M69 (8)	
A/D61K8	2160	1300	1800	1000	1440	N69 (9)	
A/D62K0	2400	1400	2000	1100	1600	O69 (10)	
A/D62K2	2640	1600	2200	1200	1760	P69 (11)	
A/D62K4	2880	1700	2400	1400	1920	Q69 (12)	
A/D62K6	3120	1900	2600	1500	2080	R69 (13)	
A/D62K8	3360	2000	2800	1600	2240	S69 (14)	
A/D63K0	3600	2200	3000	1700	2400	T69 (15)	

* Available during limited time and as long as allowed by drive temperature.
** PEBB= Power Electronic Building Block (power module).

Table 58 Typical motor power at mains voltage 575 and 690 V. AC drive main voltage range 500 - 690 V.

Model SX-V	Max. output current [A]*	Normal duty (120%, 1 min every 10 min)			Heavy duty (150%, 1 min every 10 min)			Frame size (Number of PEBB´s)**	IP class
		Power @575V [HP]	Power @690V [kW]	Rated current [A]	Power @575V [HP]	Power @690V [kW]	Rated current [A]		
D61P5	3.2	1.5	1.5	2	1	0.75	1.6	C69	IP 54 wall mounted
D62P2	4.8	2	2.2	3	1.5	1.5	2.4		
D63P0	6.4	3	3	4	2	2.2	3.2		
D64P0	9.6	4	4	6	3	3	4.8		
D65P5	12.8	5	5.5	8	4	4	6.4		
D67P5	16	7.5	7.5	10	5	5.5	8		
D6011	20.8	10	11	13	7.5	7.5	10.4		
D6015	29	15	15	18	10	11	14.4		
D6018	34	20	18.5	21	15	15	16.8		
D6022	40	25	22	25	20	18.5	20		
D6030	53	30	30	33	25	22	26	D69	
D6037	67	40	37	42	30	30	34		
D6045	80	50	45	50	40	37	40		
D6055	93	60	55	58	40	45	46		
D6075	98	75	75	82	60	55	66	F69	
D6090	108	75	90	90	60	75	72		
D6110	131	100	110	109	75	90	87		
D6132	175	125	132	146	100	110	117		
D6160	210	150	160	175	125	132	140		
D6200	240	200	200	200	150	160	160		
A/D6250	300	250	250	250	200	200	200	H69 (2)	IP 20 module or IP54 cabinet
A/D6315	360	300	315	300	250	250	240		
A/D6355	450	350	355	375	300	315	300		
A/D6400	480	400	400	400	300	315	320		
A/D6450	516	400	450	430	350	315	344	I69 (3)	
A/D6500	600	500	500	500	400	355	400		
A/D6600	720	600	600	600	500	450	480		
A/D6630	780	650	630	650	550	500	520	J69 (4)	
A/D6710	864	750	710	720	600	560	576		
A/D6800	960	850	800	800	650	630	640		
A/D6900	1080	950	900	900	750	710	720	KA69 (5)	
A/D61K0	1200	1000	1000	1000	850	800	800		
A/D61K2	1440	1200	1200	1200	1000	900	960	K69 (6)	
A/D61K4	1680	1500	1400	1400	1200	1120	1120	L69 (7)	
A/D61K6	1920	1700	1600	1600	1300	1250	1280	M69 (8)	
A/D61K8	2160	1900	1800	1800	1500	1400	1440	N69 (9)	
A/D62K0	2400	2100	2000	2000	1700	1600	1600	O69 (10)	
A/D62K2	2640	2300	2200	2200	1800	1700	1760	P69 (11)	
A/D62K4	2880	2500	2400	2400	2000	1900	1920	Q69 (12)	
A/D62K6	3120	2700	2600	2600	2200	2000	2080	R69 (13)	
A/D62K8	3360	3000	2800	2800	2400	2200	2240	S69 (14)	
A/D63K0	3600	3200	3000	3000	2500	2400	2400	T69 (15)	

* Available during limited time and as long as allowed by drive temperature.
** PEBB= Power Electronic Building Block (power module).

14.2 General electrical specifications

Table 59 General electrical specifications

General	
Mains voltage: SX-V_4 SX-V_6 Mains frequency: Mains voltage imbalance: Input power factor: Output voltage: Output frequency: Output switching frequency: Efficiency at nominal load:	230-480 V +10%/-15% (-10% at 230 V) 500-690 V +10%/-15% 45 to 65 Hz max. ±3.0% of nominal phase to phase input voltage. 0.95 0–Mains supply voltage: 0–400 Hz 3 kHz (adjustable 1,5-6 kHz) 2 kHz sizes 48-293/295/365 97% for models 002 to 021 98% for models 025 to 3K0
Control signal inputs: Analogue (differential)	
Analogue Voltage/current: Max. input voltage: Input impedance: Resolution: Hardware accuracy: Non-linearity	0-±10 V/0-20 mA via switch +30 V/30 mA 40 kohm (voltage) 252 ohm (current) 11 bits + sign 1% type + 1 ½ LSB fsd 1½ LSB
Digital:	
Input voltage: Max. input voltage: Input impedance: Signal delay:	High: >9 VDC, Low: <4 VDC +30 VDC <3.3 VDC: 4.7 kohm ≥3.3 VDC: 3.6 kohm ≤8 ms
Control signal outputs Analogue	
Output voltage/current: Max. output voltage: Short-circuit current (∞): Output impedance: Resolution: Maximum load impedance for current Hardware accuracy: Offset: Non-linearity:	0-10 V/0-20 mA via software setting +13 V @5 mA cont. +160 mA (voltage), +160 mA (current) 0 ohm (voltage) 10 bit 500 ohm 1.9% type fsd (voltage), 2.4% type fsd (current) 3 LSB 2 LSB
Digital	
Output voltage: Shortcircuit current(∞):	High: >20 VDC @50 mA, >23 VDC open Low: <1 VDC @50 mA 100 mA max (together with +24 VDC)
Relays	
Contacts	0.1 – 2 A/Umax 250 VAC or 42 VDC (30 VDC acc. to UL requirement) for general Purpose or Resistive use only .
RS-485 communication	
Differential voltage:	-7 V to 12 V

Table 59 General electrical specifications

References	
+10VDC -10VDC +24VDC	+10 V_{DC} @10 mA Short-circuit current +30 mA max - 10 V_{DC} @10 mA +24 V_{DC} Short-circuit current +100 mA max (together with Digital Outputs)
Standby supply	
Standby supply input voltage for control unit.	24 VDC ±10% (max 1A consumption)

14.3 Operation at higher temperatures

Most Omron AC drives are made for operation at maximum of 40 °C (104 °F) ambient temperature.
Frame sizes C69/D69/C2(69)/D2(69) are rated at 45 °C (113 °F). However, it is possible to use the AC drive at higher temperatures with reduced output rating.

Possible derating

Derating of output current is possible with
-1% / degree Celsius to max +15 °C * (= max temp 55 °C) or
-0.55%/ degree Fahrenheit to max +27 °F
(= max temp. 131 °F).

* max +10 °C for sizes C69/D69/C2(69)/D2(69).

Example

In this example we have a motor with the following data that we want to run at the ambient temperature of
45 °C (113 °F):

Voltage 400 V
Current 72 A
Power 37 kW (50 hp)

Select AC drive

The ambient temperature is 5 °C (9 °F) higher than the maximum ambient temperature. The following calculation is made to select the correct AC drive model.

Derating is possible with loss in performance of
1%/°C (0.55%/ degree F).

Derating will be: 5 x 1% = 5%

Calculation for model SX-4037-EV
74 A - (5% x 74) = 70.3 A; this is not enough.

Calculation for model SX-4045-EV
90 A - (5% x 90) = 85.5 A

In this example we select the SX-4045-EV.

14.4 Operation at higher switching frequency

Table 60 shows the switching frequency for the different AC drive models. With the possibility of running at higher switching frequency you can reduce the noise level from the motor. The switching frequency is set in menu [22A], Motor sound, see section section 11.4.4, page 109. At switching frequencies >3 kHz derating might be needed.

Table 60 Switching frequency

Models	Standard Switching frequency	Range
SX-V##-002 to SX-V##-3K0	3 kHz	1.5–6 kHz
SX-V##-293, -295 and -365	2kHz	

14.5 Dimensions and Weights

The table below gives an overview of the dimensions and weights. The models 002 to 295 and 365 are available in IP54 as wall mounted modules.
The models 300 to 3K0 consist of 2, 3, 4 .... 15 paralleled power electronic building block (PEBB) available in IP20 intended for cabinet mounting or mounted in IP54 standard cabinet.
Protection class IP54 is according to the EN 60529 standard.

Table 61 Mechanical specifications, SX-V_4 for IP20 module and IP54

Models	Frame size	IP20 module Dim. H x W x D mm (in)	IP54 Dim. H x W x D mm (in)	IP20 Weight kg (lb)	IP54 Weight kg (lb)
40P7 to 47P5	B	–	350/416* x 203 x 200 (13.8/16.4* x 8.0 x 7.9)	–	12.5 (27.6)
4011 to 4022	C	–	440/512* x 178 x 292 (17.3/20.2* x 7.0 x 11.5)	–	24 (52.9)
4030 to 4037	D	–	545/590* x 220 x 295 (21.5/23.2* x 8.7 x 11.5)	–	32 (70.6)
4045 to 4055	E	–	950 x 285 x 314 (37.4 x 11.2 x 12.4)	–	56 (123.5)
4075 to 4090	E	–	950 x 285 x 314 (37.4 x 11.2 x 12.4)	–	60 (132.3)
4110 to 4160	F	–	950 x 345 x 314 (37.4 x 13.6 x 12.4)	–	75 (165.4)
4200	FA	-	1395 x 345 x 365 (54.9 x 13.6 x 14.4)	-	95 (209)
4220 to 4250	H (2xF)	1036 x 500 x 450 (40.8 x 19.7x 17.7)	2250 x 600 x 600 (88.6 x 23.6 x 23.6)	170 (374.8)	380 (837.8)
4315 to 4400	I (3xF)	1036 x 730 x 450 (40.8 x 28.7x 17.7)	2250x 900 x 600 (88.6 x 35.4 x 23.6)	248 (546.7)	506 (1116)
4450 to 4500	J (2xH)	1036 x 1100 x 450 (40.8 x 43.3x 17.7)	2250 x 1200 x 600 (88.6 x 47.2 x 23.6)	340 (749.6)	697 (1537)
4630 to 4710	KA (H+I)	1036 x 1365 x 450 (40.8 x 53.7x 17.7)	2250 x 1500 x 600 (88.6 x 59.1 x 23.6)	418 (921.5)	838 (1847)
4750 to 4800	K (2xI)	1036 x 1630 x 450 (40.8 x 64.2x 17.7)	2250 x 1800 x 600 (88.6 x 70.9 x 23.6)	496 (1093)	987 (2176)
4900	L (2xH+I)	1036 x 2000 x 450 (40.8 x 78.7x 17.7)	2250 x 2100 x 600 (88.6 x 82.7 x 23.6)	588 (1296)	1190 (2624)
41K1	M(H+2xI)	1036 x 2230 x 450 (40.8 x 87.8x 17.7)	2250 x 2400 x 600 (88.6 x 94.5 x 23.6)	666 (1468)	1323 (2917)
41K2	N (3xI)	1036 x 2530 x 450 (40.8 x 99.6x 17.7)	2250 x 2700 x 600 (88.6 x 106.3 x 23.6)	744 (1640)	1518 (3347)
41K4	O (2xH+2xI)	1036 x 2830 x 450 (40.8 x 111.4x 17.7)	2250 x 3000 x 600 (88.6 x 118.1 x 23.6)	836 (1834)	1772 (3907)

* Enclosure height/Total height

Table 62 Mechanical specifications, SX-V_6 for IP20 module and IP54

Models	Frame size	IP20 module Dim. H x W x D mm (in)	IP54 Dim. H x W x D mm (in)	Weight IP20 kg (lb)	Weight IP54 kg (lb)
61P5 to 6022	C69	-	440/512* x 178 x 314 (17.3/20.2 x 7.0 x 12.4)	–	17 (37.5)
6030 to 6055	D69	-	545/590* x 220 x 282 (21.5/23.2 x 8.7 x 11.1)	–	32 (70.5)
6075 to 6200	F69	–	1090 x 345 x 312 (42.9 x 13.6 x 12.3)	–	77 (169.8)
6250 to 6355	H69 (2xF69)	1176 x 500 x 450 (46.3 x 19.7 x 17.7)	2250 x 600 x 600 (88.6 x 23.6 x 23.6)	176 (388)	399 (879.6)
6450 to 6600	I69 (3xF69)	1176 x 730 x 450 (46.3 x 28.7 x 17.7)	2250 x 900 x 600 (88.6 x 35.4 x 23.6)	257 (566.6)	563 (1241)
6630 to 6800	J69 (2xH69)	1176 x 1100 x 450 (46.3 x 43.3 x 17.7)	2250 x 1200 x 600 (88.6 x 47.2 x 23.6)	352 (776)	773 (1704)
6900 to 61K0	KA69 (H69+I69)	1176 x 1365 x 450 (46.3 x 53.7 x 17.7)	2250 x 1500 x 600 (88.6 x 59.1 x 23.6)	433 (954.6)	937 (2066)
61K2	K69 (2xI69)	1176 x 1630 x 450 (46.3 x 64.2 x 17.7)	2250 x 1800 x 600 (88.6 x 70.9 x 23.6)	514 (1133)	1100 (2425)
61K4	L69 (2xH69+I69)	1176 x 2000 x 450 (46.3 x 78.7 x 17.7)	2250 x 2100 x 600 (88.6 x 82.7 x 23.6)	609 (1343)	1311 (2890)
61K6	M69 (H69+2xI69)	1176 x 2230 x 450 (46.3 x 87.8 x 17.7)	2250 x 2400 x 600 (88.6 x 94.5 x 23.6)	690 (1521)	1481 (3265)
61K8	N69 (3xI69)	1176 x 2530 x 450 (46.3 x 99.6 x 17.7)	2250 x 2700 x 600 (88.6 x 106.3 x 23.6)	771 (1700)	1651 (3640)
62K0	O69 (2xH69+2xI69)	1176 x 2830 x 450 (46.3 x 111.4 x 17.7)	2250 x 3000 x 600 (88.6 x 118.1 x 23.6)	866 (1909)	1849 (4076)
62K2	P69 (H69+3xI69)	1176 x 3130 x 450 (46.3 x 123.2 x 17.7)	2250 x 3300 x 600 (88.6 x 129.9 x 23.6)	947 (2088)	2050 (4519)
62K4	Q69 (4xI69)	1176 x 3430 x 450 (46.3 x 135 x 17.7)	2250 x 3600 x 600 (88.6 x 141.7 x 23.6)	1028 (2266)	2214 (4881)
62K6	R69 (2xH69+3xI69)	1176 x 3730 x 450 (46.3 x 146.9 x 17.7)	2250 x 3900 x 600 (88.6 x 153.5 x 23.6)	1123 (2476)	2423 (5342)
62K8	S69 (H69+4xI69)	1176 x 4030 x 450 (46.3 x 158.7 x 17.7)	2250 x 4200 x 600 (88.6 x 165.4 x 23.6)	1204 (2654)	2613 (5761)
63K0	T69 (5xI69)	1176 x 4330 x 450 (46.3 x 170.5 x 17.7)	2250 x 4500 x 600 (88.6 x 177.2 x 23.6)	1285 (2833)	2777 (6122)

* Enclosure height/Total height

Dimensions and weights for models Omron SX-V_4 - IP20/21 version

The table below gives an overview of the dimensions and weights of the Omron SX-V IP20/21 version.

These AC drives are available as wall mounted modules; The IP20 version is optimised for cabinet mounting. With the optional top cover, protection class is in compliance with IP21, making it suitable for mounting directly on the electrical room wall.

The protection classes IP20 and IP21 are defined according to the EN 60529 standard.

Table 63 Mechanical specifications, SX-V_4 - IP20 and IP21 version

Models	Frame size	IP20 Dim. H1/H2 x W x D mm (in)	IP21* Dim. H1/H2 x W x D mm (in)	IP20/21 Weight kg (lb)
4011 to 4030	C2	438 / 536 x 176 x 267 (17.2 / 21.1 x 6.9 x 10.5)	438 / 559 x 196 x 282 (17.2 / 22 x 7.7 x 11.1)	17 (37.5)
4037 to 4055	D2	545 / 658 x 220 x 291 (21.5 / 25.9 x 8.7 x 11.5)	545 / 670 x 240 x 307 (21.5 / 26.4 x 9.5 x 12.1)	30 (66)
4075 to 4090	E2	956 / 956 x 275 x 294 (37.6 / 37.6 x 10.8 x 11.6)	956 / 956 x 275 x 323 (37.6 / 37.6 x 10.8 x 12.7)	53 (117)
4110 to 4160	F2	956 / 956 x 335 x 294 (37.6 / 37.6 x 13.2 x 11.6)	956 / 956 x 335 x 323 (37.6 / 37.6 x 13.2 x 12.7)	69 (152)
4200	FA2	1090 / 1250 x 335 x 306 (42.9 / 49.5 x 13.2 x 12.1)	-	84 (185)

H1 = Enclosure height.
H2 = Total height including cable interface.
* with optional top cover

Table 64 Mechanical specifications, SX-V_6 - IP20 and IP21 version

Models	Frame size	IP20 Dim. H1/H2 x W x D mm (in)	IP20 Weight kg (lb)
61P5 to 6022	C2(69)	438 / 536 x 176 x 267 (17.2 / 21.1 x 6.9 x 10.5)	17 (37.5)
6030 to 6055	D2(69)	545 / 658 x 220 x 291 (21.5 / 25.9 x 8.7 x 11.5)	30 (66)

H1 = Enclosure height.
H2 = Total height including cable interface.
* with optional top cover

14.6 Environmental conditions

Table 65 Operation

Parameter	Normal operation
Nominal ambient temperature	0 °C–40 °C (32 °F - 104 °F) See chapter 14.3 page 250 for different conditions 0 °C - 45 °C (32 °F - 113 °F) for sizes C69/D69/C2(69)/D2(69)
Atmospheric pressure	86–106 kPa (12.5 - 15.4 PSI)
Relative humidity according to IEC 60721-3-3	Class 3K4, 5...95% and non condensing
Contamination, according to IEC 60721-3-3	No electrically conductive dust allowed. Cooling air must be clean and free from corrosive materials. Chemical gases, class 3C2. Solid particles, class 3S2.
Vibrations	According to IEC 60068-2-6, Sinusodial vibrations: 10<f<57 Hz, 0.075 mm (0.00295 ft) 57<f<150 Hz, 1g (0,035 oz)
Altitude	0–1000 m (0 - 3280 ft) 480V AC drives, with derating 1%/100 m (328 ft) of rated current up to 4000 m (13123 ft) 690V AC drives, with derating 1%/100 m (328 ft) of rated current up to 2000 m (6562) ft Coated boards required for 2000 - 4000 m(6562 - 13123 ft)

Table 66 Storage

Parameter	Storage condition
Temperature	-20 to +60 °C (-4 to + 140 °F)
Atmospheric pressure	86–106 kPa (12.5 - 15.4 PSI)
Relative humidity according to IEC 60721-3-1	Class 1K4, max. 95% and non condensing and no formation of ice.

WARNING!
If the device is stored for more than two years, the DC link capacitor of the devices must be reformed during commissioning.
The reforming procedure is described in manual “Capacitor reforming unit”.

14.7 Fuses and glands

14.7.1 According to IEC ratings

Use mains fuses of the type gL/gG conforming to IEC 269 or breakers with similar characteristics. Check the equipment first before installing the glands.

Max. Fuse = maximum fuse value that still protects the AC drive and upholds warranty.

NOTE: The dimensions of fuse and cable cross-section are dependent on the application and must be determined in accordance with local regulations.

NOTE: The dimensions of the power terminals used in the cabinet drive models 300 to 3K0 can differ depending on customer specification.

Table 67 Fuses, cable cross-sections and glands for SX-V_4 models

Model SX-V	Nominal input current [A]	Maximum value fuse [A]	Cable glands (clamping range) *	
			mains / motor	Brake
D40P7	2.2	4	M32 opening M20 + reducer (6–12 mm(0.24 - 0.47 in))	M25 opening M20 + reducer (6–12 mm(0.24 - 0.47 in))
D41P5	3.5	4		
D42P2	5.2	6		
D43P0	6.9	10	M32 (12–20)/M32 opening M25+reducer (10-14 mm(0.39 - 0.55 in))	M25 (10-14 mm(0.39 - 0.55 in))
D44P0	8.7	10		
D45P5	11.3	16	M32 (16–25)/M32 (13–18)	
D47P5	15.6	20		
A4011	22	25	- (12 - 16 mm(0.55 - 0.63 in))	
D4011	22	25	M32 (15–21 mm(0.59 - 0.83 in))	M25
A4015	26	35	- (16 - 20 mm (0.63 - 0.79 in))	
D4015	26	35	M32 (15–21 mm(0.59 - 0.83 in))	M25
A4018	31	35	- (20 - 24 mm(0.79 - 0.94))	
D4018	31	35	M40 (19–28 mm (0.75 - 1.1 in))	M32
A4022	38	50	- (24 - 28 mm(0.94 - 1.1 in))	
D4022	38	50	M40 (19–28 mm (0.75 - 1.1 in))	M32
A4030	50	63	- (24 - 28 mm(0.94 - 1.1 in))	
D4030	52	63	M50 (27 - 35 mm(1.06 - 1.38 in))	M40 (19–28 mm (0.75 - 1.1 in))
A4037	64	80	- (28 - 32 mm(1.1 - 1.26 in))	
D4037	65	80	M50 (27 - 35 mm(1.06 - 1.38 in))	M40 (19–28 mm(0.75 - 1.1 in))
A4045	78	100	- (32 - 36 mm(1.26 - 1.42 in))	
D4045	78	100	(Ø17-42 mm (0.67 - 1.65 in)) cable flexible leadthrough or M50 opening.	(Ø11-32 mm(0.43 - 1.26 in)) Cable flexible leadthrough or M40 opening.
A4055	91	100	(32 - 36 mm(1.26 - 1.42 in)	
D4055	94	100	(Ø17-42 mm (0.67 - 1.65 in)) cable flexible leadthrough or M50 opening	(Ø11-32 mm(0.43 - 1.26 in)) Cable flexible leadthrough or M40 opening
A4075	126	160	- (40 - 44 mm (1.57 - 1.73 in))	- (36 - 40 mm(1.42 - 1.57 in))
D4075	126	160	(Ø17-42 mm (0.67 - 1.65 in)) cable flexible leadthrough or M50 opening.	(Ø11-32 mm(0.43 - 1.26 in)) Cable flexible leadthrough or M40 opening.
A4090	152	160	- (40 - 44 mm (1.57 - 1.73 in))	- (36 - 40 mm(1.42 - 1.57 in))
D4090	152	160	(Ø17-42 mm (0.67 - 1.65 in)) cable flexible leadthrough or M50 opening.	(Ø11-32 mm(0.43 - 1.26 in)) Cable flexible leadthrough or M40 opening.

Table 67 Fuses, cable cross-sections and glands for SX-V_4 models

Model SX-V	Nominal input current [A]	Maximum value fuse [A]	Cable glands (clamping range) *	
			mains / motor	Brake
A4110	178	200	- (48 - 52 mm(1.89 - 2.05 in)/ 52 - 56 mm (2.05 - 2.2 in))	- (44 - 48 mm (1.73 - 1.89 in))
D4110	182	200	(Ø23 - 55 mm (0.9 - 2.16 in)) cable flexible leadthrough or M63 opening.	(Ø17- 42 mm (0.67 - 1.65 in)) cable flexible leadthrough or M50 opening.
A4132	211	250	- (48 - 52 mm (1.89 - 2.05 in)/ 52 - 56 mm (2.05 - 2.2 in))	- (44 - 48 mm (1.73 - 1.89 in))
D4132	216	250	(Ø 23 - 55 mm (0.9 - 2.16 in)) cable flexible leadthrough or M63 opening.	(Ø 23 - 55 mm (0.9 - 2.16 in)) cable flexible leadthrough or M63 opening.
D4160	256	300		
A4160	254	300	- (48 - 52 mm (1.89 - 2.05 in)/ 52 - 56 mm (2.05 - 2.2 in))	- (44 - 48 mm (1.73 - 1.89 in))
A4200-E3	324	355	(Ø 23 - 55 mm (0.9 - 2.16 in)) cable flexible leadthrough or M63 opening.	(Ø 23 - 55 mm (0.9 - 2.16 in)) cable flexible leadthrough or M63 opening.
D4200-E3	324	355	M10 bolt for cable lugs	M8 bolt for cable lugs
A/D4220	372	400	--	--
A/D4250	432	500		
A/D4315	520	630		
A/D4355	562	630		
A/D4400	648	710		
A/D4450	744	800		
A/D4500	864	1000		
A/D4630	996	1250		
A/D4710	1037	1250		
A/D4750	1170	1250		
A/D4800	1296	1500		
A/D4900	1516	1600		
A/D41K1	1732	2 x 900		
A/D41K2	1949	2 x 1000		
A/D41K4	2165	2 x 1250		

Note: For IP54 models 40P7 to 4030 and 61P5 to 6055 cable glands are optional.

* IP20/21 models are equipped with cable clamps instead of glands.

For data on cable connection ranges, see section 3.4.3, page 39.

Table 68 Fuses, cable cross-sections and glands for 690V models

Model SX-V	Nominal input current [A]	Maximum value fuse [A]	Cable glands (clamping range) *	
			mains / motor	Brake
D61P5	1.6	4	M32 (8 - 17 / 9 - 17 mm)	M25 (9 - 17 mm)
A61P5	1.6	4	8 - 12 mm (0.32 - 0.47 in) 12 - 16 mm (0.47 - 0.63 in)	
D62P2	2.3	4	M32 (8 - 17 / 9 - 17 mm)	M25 (9 - 17 mm)
A62P2	2.3	4	8 - 12 mm (0.32 - 0.47 in) 12 - 16 mm (0.47 - 0.63 in)	
D63P0	3.1	4	M32 (8 - 17 / 9 - 17 mm)	M25 (9 - 17 mm)
A63P0	3.1	4	8 - 12 mm (0.32-0.47 in) 12 - 16 mm (0.47-0.63 in)	
D64P0	4.7	6	M32 (8 - 17 / 9 - 17 mm)	M25 (9 - 17 mm)
A64P0	4.7	6	8 - 12 mm (0.32 - 0.47 in) 12 - 16 mm (0.47 - 0.63 in)	
D65P5	6.3	10	M32 (8-17 / 9 - 17 mm)	M25 (9 - 17 mm)
A65P5	6.3	10	8 - 12 mm (0.32 - 0.47 in) 12 - 16 mm (0.47 - 0.63 in)	
D67P5	7.8	10	M32 (8-17 / 9 - 17 mm)	M25 (9 - 17 mm)
A67P5	7.8	10	8 - 12 mm (0.32 - 0.47 in) 12 - 16 mm (0.47 - 0.63 in)	
D6011	10.4	16	M32 (9 - 21 /11 - 21 mm)	M25 (9 - 17 mm)
A6011	10.4	16	12 - 16 mm (0.47 - 0.63 in) 16 - 22 mm (0.63 - 0.87 in)	
D6015	15.3	20	M32 (9 - 21 / 11 - 21 mm)	M25 (9 - 17 mm)
A6015	15.3	20	12 - 16 mm (0.47 - 0.63 in) 16 - 22 mm (0.63 - 0.87 in)	
D6018	17.8	25	M32 (9 - 21 / 11 - 21 mm)	M25 (9 - 17 mm)
A6018	17.8	25	12 - 16 mm (0.47 - 0.63 in) 16 - 22 mm (0.63 - 0.87 in)	
D6022	21.2	25	M32 (9-21 / 11-21 mm)	M25 (9 - 17 mm)
A6022	21.2	25	12 - 16 mm (0.47 - 0.63 in) 16 - 22 mm (0.63 - 0.87 in)	
D6030	28	35	M50 (19 - 28 / 16 - 28 mm)	M40 (16 - 28 mm)
A6030	28	35	16 - 22 mm (0.63 - 0.87 in) 22 - 28 mm (0.87 - 1.1 in)	
D6037	36	50	M50 (19 - 28 / 16-28 mm)	M40 (16 - 28 mm)
A6037	36	50	16 - 22 mm (0.63 - 0.87 in) 22 - 28 mm (0.87 - 1.1 in)	
D6045	43	63	M50 (19 - 28 / 16 - 28 mm)	M40 (16 - 28 mm)
A6045	43	63	16 - 22 mm (0.63 - 0.87 in) 22 - 28 mm (0.87 - 1.1 in)	
D6055	49	63	M50 (19 - 28 / 16 - 28 mm)	M40 (16 - 28 mm)
A6055	49	63	16 - 22 mm (0.63 - 0.87 in) 22 - 28 mm (0.87 - 1.1 in)	
D6075	72	100	(Ø23-55 mm (0.9 - 2.16 in)) Cable flexible leadthrough or M63 opening. (Ø17-42 mm (0.67 - 1.65 in)) Cable flexible leadthrough or M50 opening.	
D6090	78	100		
D6110	94	100		
D6132	126	160		
D6160	152	160		
D6200	173	200		

Table 68 Fuses, cable cross-sections and glands for 690V models

Model SX-V	Nominal input current [A]	Maximum value fuse [A]	Cable glands (clamping range) *	
			mains / motor	Brake
A/D6250	216	250	--	--
A/D6315	260	300		
A/D6355	324	355		
A/D6400	346	400		
A/D6450	372	400		
A/D6500	432	500		
A/D6600	516	630		
A/D6630	562	630		
A/D6710	648	710		
A/D6800	692	800		
A/D6900	795	900		
A/D61K0	864	1000	--	--
A/D61K2	1037	1250		
A/D61K4	1213	1500		
A/D61K6	1382	1600		
A/D61K8	1555	2 x 900		
A/D62K0	1732	2 x 900		
A/D62K2	1900	2 x 1000		
A/D62K4	2074	2 x 1250		
A/D62K6	2246	2 x 1250		
A/D62K8	2419	2 x 1500		
A/D63K0	2592	2 x 1500		

Note: For IP54 models 40P7 to 4030 and 61P5 to 6055 cable glands are optional.

* IP20/21 models are equipped with cable clamps instead of glands.

For data on cable connection ranges, see section 3.4.3, page 39

14.7.2 Fuses according to NEMA ratings

Table 69 Types and fuses

Model SX-V	Input current [Arms]	Mains input fuses	
		UL Class J TD (A)	Ferraz-Shawmut type
D40P7	2.2	6	AJT6
D41P5	3.5	6	AJT6
D42P2	5.2	6	AJT6
D43P0	6.9	10	AJT10
D44P0	8.7	10	AJT10
D45P5	11.3	15	AJT15
D47P5	15.6	20	AJT20
A4011	21.7	25	AJT25
D4011	22	25	AJT25
A4015	26	30	AJT30
D4015	26	30	AJT30
A4018	31	35	AJT35
D4018	31	35	AJT35
A4022	39	45	AJT45
D4022	40	45	AJT45
A4030	50	60	AJT60
D4030	52	60	AJT60
A4037	64	80	AJT80
D4037	65	80	AJT80
A4045	78	100	AJT100
D4045	78	100	AJT100
A4055	91	110	AJT110
D4055	94	110	AJT110
A4075	126	125	AJT150
D4075	126	150	AJT150
A4090	152	175	AJT175
D4090	152	175	AJT175
A4110	178	200	AJT200
D4110	182	200	AJT200
A4132	211	250	AJT250
D4132	216	250	AJT250
A4160	254	300	AJT300
D4160	256	300	AJT300
A4200-E3/ D4200-E3	324	350	AJT350
A/D4220	372	400	AJT400
A/D4250	432	500	AJT500
A/D4315	520	600	AJT600
A/D4355	562	600	AJT600
A/D4400	648	700	A4BQ700
A/D4450	744	800	A4BQ800

Table 69 Types and fuses

Model SX-V	Input current [Arms]	Mains input fuses	
		UL Class J TD (A)	Ferraz-Shawmut type
A/D4500	864	1000	A4BQ1000
A/D4630	996	1000	A4BQ1000
A/D4710	1037	1200	A4BQ1200
A/D4750	1170	1200	A4BQ1200
A/D4800	1296	1500	A4BQ1500
A/D4900	1516	1600	A4BQ1600
A/D41K1	1732	1800	A4BQ1800
A/D41K2	1949	2000	A4BQ2000
A/D41K4	2165	2500	A4BQ2500

14.8 Control signals

Table 70

Terminal X1	Name:	Function (Default):	Signal:	Type:
1	+10 V	+10 VDC Supply voltage	+10 VDC, max 10 mA	output
2	AnIn1	Process reference	0 -10 VDC or 0/4–20 mA bipolar: -10 - +10 VDC or -20 - +20 mA	analogue input
3	AnIn2	Off	0 -10 VDC or 0/4–20 mA bipolar: -10 - +10 VDC or -20 - +20 mA	analogue input
4	AnIn3	Off	0 -10 VDC or 0/4–20 mA bipolar: -10 - +10 VDC or -20 - +20 mA	analogue input
5	AnIn4	Off	0 -10 VDC or 0/4–20 mA bipolar: -10 - +10 VDC or -20 - +20 mA	analogue input
6	-10 V	-10VDC Supply voltage	-10 VDC, max 10 mA	output
7	Common	Signal ground	0V	output
8	DigIn 1	RunL	0-8/24 VDC	digital input
9	DigIn 2	RunR	0-8/24 VDC	digital input
10	DigIn 3	Off	0-8/24 VDC	digital input
11	+24 V	+24VDC Supply voltage	+24 VDC, 100 mA	output
12	Common	Signal ground	0 V	output
13	AnOut 1	Min speed to max speed	0 ±10 VDC or 0/4– +20 mA	analogue output
14	AnOut 2	0 to max torque	0 ±10 VDC or 0/4– +20 mA	analogue output
15	Common	Digital signal ground	0 V via ferrite	output
16	DigIn 4	Off	0-8/24 VDC	digital input
17	DigIn 5	Off	0-8/24 VDC	digital input
18	DigIn 6	Off	0-8/24 VDC	digital input
19	DigIn 7	Off	0-8/24 VDC	digital input
20	DigOut 1	Ready	24 VDC, 100 mA	digital output
21	DigOut 2	No trip	24 VDC, 100 mA	digital output
22	DigIn 8	RESET	0-8/24 VDC	digital input
A+		RS-485 transmit and receive signals	Isolated differential signals -7V to 12V	Communication
B-				
Terminal X2				
31	N/C 1	Relay 1 output Trip, active when the AC drive is in a TRIP condition N/C is opened when the relay is active (valid for all relays) N/O is closed when the relay is active (valid for all relays)	potential free change over 0.1 – 2 A U_{max} = 250 VAC or 42 VDC	relay output
32	COM 1			
33	N/O 1			
41	N/C 2	Relay 2 Output Run, active when the AC drive is started	potential free change over 0.1 – 2 A U_{max} = 250 VAC or 42 VDC	relay output
42	COM 2			
43	N/O 2			
Terminal X3				
51	COM 3	Relay 3 Output Off	potential free change over 0.1 – 2 A U_{max} = 250 VAC or 42 VDC	relay output
52	N/O 3			

Table 70

Terminal X1	Name:	Function (Default):	Signal:	Type:
Terminal X11				
+	24 VDC±10%	Input from 24 VDC ±10% double isolated transformer capable of supplying 1A continues current. Recommended fuse is 2A.		input
-	0 V in			

NOTE: Possible potentiometer value in range of 1 kΩ to 10 kΩ (¼ Watt) linear, where we advice to use a linear 1 kΩ / ¼ W type potentiometer for best control linearity.

15. Menu List

On our home page in the download area, you could find a “Communication information” list and a list to note Parameter set information

Menu Parameters		Default settings	Modbus Instance/ Device Net No.	Profibus slot/index	EtherCAT index (HEX)	Profinet index	Fieldbus format	Modbus format	Notes
100	Start Window [100]								
110	1st Line	Process Val	43001	168/160	4BB9	19385	UInt	UInt	
120	2nd Line	Current	43002	168/161	4BBA	19386	UInt	UInt	
130	3rd Line	Frequency	43003	168/162	4BBB	19387	UInt	UInt	
140	4th Line	VSD Status	43004	168/163	4BBC	19388	UInt	UInt	
150	5th Line	DC Voltage	43005	168/164	4BBD	19389	UInt	UInt	
160	6th Line	IGBT Temp	43006	168/165	4BBE	19390	UInt	UInt	
170	View mode	Normal 100	43007	168/166	4BBF	19391	UInt	UInt	
200	Main Setup [200]								
210	Operation [210]								
211	Language	English	43011	168/170	4BC3	19395	UInt	UInt	
212	Select Motor	M1	43012	168/171	4BC4	19396	UInt	UInt	
213	Drive Mode	V/Hz	43013	168/172	4BC5	19397	UInt	UInt	
214	Ref control	Remote	43014	168/173	4BC6	19398	UInt	UInt	
215	Run/Stp Ctrl	Remote	43015	168/174	4BC7	19399	UInt	UInt	
216	Reset Ctrl	Remote	43016	168/175	4BC8	19400	UInt	UInt	
217	Local/Remote key function [217]								
2171	LocRefCtrl	Standard	43009	168/168	4BC1	19393	UInt	UInt	
2172	LocRunCtrl	Standard	43010	168/169	4BC2	19394	UInt	UInt	
218	Lock code?	0	43018	168/177	4BCA	19402	UInt, 1=1	UInt	
219	Rotation	R+L	43019	168/178	4BCB	19403	UInt	UInt	
21A	Level/Edge	Level	43020	168/179	4BCC	19404	UInt	UInt	
21B	Supply Volts	Not Defined	43381	170/30	4D35	19765	UInt	UInt	
21C	Supply Type	AC Supply	43382	170/31	4D36	19766	UInt	UInt	
21D	Fire mode	Off	49333	193/117	6475	25717	UInt	UInt	
220	Motor Data [220]								
221	Motor Volts	[Motor] V	43041	168/200	4BE1	19425	Long, 1=0.1V	EInt	
222	Motor Freq	50Hz	43060	168/219	4BF4	19444	Long, 1=0.1Hz	EInt	
223	Motor Power	[Motor] W	43043	168/202	4BE3	19427	Long, 1=1W	EInt	
224	Motor Curr	[Motor] A	43044	168/203	4BE4	19428	Long, 1=0.1A	EInt	
225	Motor Speed	[Motor] rpm	43045	168/204	4BE5	19429	UInt, 1=1rpm	UInt	
226	Motor Poles	[Motor]	43046	168/205	4BE6	19430	Long, 1=1	EInt	

Menu Parameters		Default settings	Modbus Instance/ Device Net No.	Profibus slot/index	EtherCAT index (HEX)	Profinet index	Fieldbus format	Modbus format	Notes
227	Motor Cosφ	[Motor]	43047	168/206	4BE7	19431	Long, 1=0.01	EInt	
228	Motor Vent	Self	43048	168/207	4BE8	19432	UInt	UInt	
229	Motor ID-Run	Off	43049	168/208	4BE9	19433	UInt	UInt	
22A	Motor Sound	F	43050	168/209	4BEA	19434	UInt	UInt	
22B	Encoder	Off	43051	168/210	4BEB	19435	UInt	UInt	
22C	Enc Pulses	1024	43052	168/211	4BEC	19436	Long, 1=1	EInt	
22D	Enc Speed	0rpm	42911	168/70	4B5F	19295	Int, 1=1rpm	Int	
22E	Motor PWM [22E]								
22E1	PWM Fswitch	3000Hz	43053	168/212	4BED	19437	UInt, 1=1Hz	UInt	
22E2	PWM Mode	Standard	43054	168/213	4BEE	19438	UInt	UInt	
22E3	PWM Random	Off	43055	168/214	4BEF	19439	UInt	UInt	
22E4	Udc filter	Off	43040	168/199	4BE0	19424	UInt	UInt	
22F	Enc Puls Ctr	0	42912	168/71	4B60	19296	Long, 1=1	Int	
22G	Encoder fault and speed monitoring [22G]								
22G1	Enc F Delay	Off	43056	168/215	4BF0	19440	Long, 1=0.01s	EInt	
22G2	Enc F Band	10%	43057	168/216	4BF1	19441	Long, 1=1%	EInt	
22G3	Max EncFCtr	0.000s	42913	168/72	4B61	19297	Long, 1=0.001s	EInt	
22H	Phase order	Normal	43058	168/217	4BF2	19442	UInt	UInt	
22I	Motor Type	Async	43059	168/218	4BF3	19443	UInt	UInt	
22J	Extend data [22J]								
22J1	BEMF	[Motor] V	43391	170/40	4D3F	19775	Long, 1=0.1V	EInt	
22J2	Rs (mΩ/ph)	[Motor]	43392	170/41	4D40	19776	Long, 1=0.000001	EInt	
22J3	Lsd (mH/ph)	[Motor]	43393	170/42	4D41	19777	Long, 1=0.001	EInt	
22J4	Lsq (mH/ph)	[Motor]	43394	170/43	4D42	19778	Long, 1=0.001	EInt	
230	Motor Protection [230]								
231	Mot I2t Type	Trip	43061	168/220	4BF5	19445	UInt	UInt	
232	Mot I2t Curr	100%	43062	168/221	4BF6	19446	Long, 1=1%	EInt	
233	Mot I2t Time	60s	43063	168/222	4BF7	19447	Long, 1=1s	EInt	
234	Thermal Prot	Off	43064	168/223	4BF8	19448	UInt	UInt	
235	Mot Class	F 140°C	43065	168/224	4BF9	19449	UInt	UInt	
236	PT100 Inputs	PT100 1+2+3	43066	168/225	4BFA	19450	UInt	UInt	
237	Motor PTC	Off	43067	168/226	4BFB	19451	UInt	UInt	
238	I²t Min Spd	0rpm	43386	170/35	4D3A	19770	Int, 1=1rpm	Int	
240	Parameter Set Handling [240]								

Menu Parameters		Default settings	Modbus Instance/ Device Net No.	Profibus slot/index	EtherCAT index (HEX)	Profinet index	Fieldbus format	Modbus format	Notes
241	Select Set	A	43022	168/181	4BCE	19406	UInt	UInt	
242	Copy Set	A>B	43021	168/180	4BCD	19405	UInt	UInt	
243	Default>Set	A	43023	168/182	4BCF	19407	UInt	UInt	
244	Copy to CP	No Copy	43024	168/183	4BD0	19408	UInt	UInt	
245	Load from CP	No Copy	43025	168/184	4BD1	19409	UInt	UInt	
250	Trip Autoreset/Trip Conditions [250]								
251	No of Trips	0	43071	168/230	4BFF	19455	UInt, 1=1	UInt	
252	Over temp	Off	43072	168/231	4C00	19456	Long, 1=1s	EInt	
253	Over volt D	Off	43075	168/234	4C03	19459	Long, 1=1s	EInt	
254	Over volt G	Off	43076	168/235	4C04	19460	Long, 1=1s	EInt	
255	Over volt	Off	43077	168/236	4C05	19461	Long, 1=1s	EInt	
256	Motor Lost	Off	43083	168/242	4C0B	19467	Long, 1=1s	EInt	
257	Locked Rotor	Off	43086	168/245	4C0E	19470	Long, 1=1s	EInt	
258	Power Fault	Off	43087	168/246	4C0F	19471	Long, 1=1s	EInt	
259	Undervoltage	Off	43088	168/247	4C10	19472	Long, 1=1s	EInt	
25A	Motor I2t	Off	43073	168/232	4C01	19457	Long, 1=1s	EInt	
25B	Motor I2t TT	Trip	43074	168/233	4C02	19458	UInt	UInt	
25C	PT100	Off	43078	168/237	4C06	19462	Long, 1=1s	EInt	
25D	PT100 TT	Trip	43079	168/238	4C07	19463	UInt	UInt	
25E	PTC	Off	43084	168/243	4C0C	19468	Long, 1=1s	EInt	
25F	PTC TT	Trip	43085	168/244	4C0D	19469	UInt	UInt	
25G	Ext Trip	Off	43080	168/239	4C08	19464	Long, 1=1s	EInt	
25H	Ext Trip TT	Trip	43081	168/240	4C09	19465	UInt	UInt	
25I	Com Error	Off	43089	168/248	4C11	19473	Long, 1=1s	EInt	
25J	Com Error TT	Trip	43090	168/249	4C12	19474	UInt	UInt	
25K	Min Alarm	Off	43091	168/250	4C13	19475	Long, 1=1s	EInt	
25L	Min Alarm TT	Trip	43092	168/251	4C14	19476	UInt	UInt	
25M	Max Alarm	Off	43093	168/252	4C15	19477	Long, 1=1s	EInt	
25N	Max Alarm TT	Trip	43094	168/253	4C16	19478	UInt	UInt	
25O	Over curr F	Off	43082	168/241	4C0A	19466	Long, 1=1s	EInt	
25P	Pump	Off	43095	168/254	4C17	19479	Long, 1=1s	EInt	
25Q	Over speed	Off	43096	169/0	4C18	19480	Long, 1=1s	EInt	
25R	Ext Mot Temp	Off	43097	169/1	4C19	19481	Long, 1=1s	EInt	
25S	Ext Mot TT	Trip	43098	169/2	4C1A	19482	UInt	UInt	
25T	LC Level	Off	43099	169/3	4C1B	19483	Long, 1=1s	EInt	
25U	LC Level TT	Trip	43100	169/4	4C1C	19484	UInt	UInt	
25V	Brk Fault	Off	43070	168/229	4BFE	19454	Long, 1=1s	EInt	
25W	Encoder	Off	43561	170/210	4DE9	19945	Long, 1=1s	EInt	

Menu Parameters		Default settings	Modbus Instance/ Device Net No.	Profibus slot/index	EtherCAT index (HEX)	Profinet index	Fieldbus format	Modbus format	Notes
260	Serial Communication [260]								
261	Com Type	RS232/485	43031	168/190	4BD7	19415	UInt	UInt	
262	RS232/485								
2621	Baudrate	9600	43032	168/191	4BD8	19416	UInt	UInt	
2622	Address	1	43033	168/192	4BD9	19417	UInt, 1=1	UInt	
263	Fieldbus								
2631	Address	62	43034	168/193	4BDA	19418	UInt, 1=1	UInt	
2632	PrData Mode	Basic	43035	168/194	4BDB	19419	UInt	UInt	
2633	Read/Write	RW	43036	168/195	4BDC	19420	UInt	UInt	
2634	AddPrValues	0	43039	168/198	4BDF	19423	UInt, 1=1	UInt	
2635	CANBaudrate	8	43030	168/189	4BD6	19414	UInt, 1=1	UInt	
264	Communication Fault [264]								
2641	ComFlt Mode	Off	43037	168/196	4BDD	19421	UInt	UInt	
2642	ComFlt Time	0,5s	43038	168/197	4BDE	19422	Long, 1=0.1s	EInt	
2643	485Flt Mode	Off	42979	169/33	4C39	19513	UInt	UInt	
2644	485Flt Time	0,5s	43130	169/34	4C3A	19514	Long, 1=0.1s	EInt	
2645	KbdComFMode	Trip	42981	168/140	4BA5	19365	UInt	UInt	
2646	KbdComFTime	2s	42982	168/141	4BA6	19366	UInt, 1=0.1s	UInt	
2647	CPportFMode	Trip	42983	168/142	4BA7	19367	UInt	UInt	
2648	CPportFTime	10.0s	42984	168/143	4BA8	19368	UInt, 1=0.1s	UInt	
265	Ethernet [265]								
2651	IP Address	0.0.0.0	42701	167/115	4A8D	19085	UInt, 1=1	UInt	
			42702	167/116	4A8E	19086	UInt, 1=1	UInt	
			42703	167/117	4A8F	19087	UInt, 1=1	UInt	
			42704	167/118	4A90	19088	UInt, 1=1	UInt	
2652	MAC Address	000000000000	42705	167/119	4A91	19089	UInt, 1=1	UInt	
			42706	167/120	4A92	19090	UInt, 1=1	UInt	
			42707	167/121	4A93	19091	UInt, 1=1	UInt	
			42708	167/122	4A94	19092	UInt, 1=1	UInt	
			42709	167/123	4A95	19093	UInt, 1=1	UInt	
			42710	167/124	4A96	19094	UInt, 1=1	UInt	
2653	Subnet Mask	0.0.0.0	42711	167/125	4A97	19095	UInt, 1=1	UInt	
			42712	167/126	4A98	19096	UInt, 1=1	UInt	
			42713	167/127	4A99	19097	UInt, 1=1	UInt	
			42714	167/128	4A9A	19098	UInt, 1=1	UInt	

Menu Parameters		Default settings	Modbus Instance/ Device Net No.	Profibus slot/index	EtherCAT index (HEX)	Profinet index	Fieldbus format	Modbus format	Notes
2654	Gateway	0.0.0.0	42715	167/129	4A9B	19099	UInt, 1=1	UInt	
			42716	167/130	4A9C	19100	UInt, 1=1	UInt	
			42717	167/131	4A9D	19101	UInt, 1=1	UInt	
			42718	167/132	4A9E	19102	UInt, 1=1	UInt	
2655	DHCP	Off	42719	167/133	4A9F	19103	UInt	UInt	
266	Fieldbus Signals [266]	0							
2661	FB S1/Wr1	0	42801	167/215	4AF1	19185	UInt, 1=1	UInt	
2662	FB S2/Wr2	0	42802	167/216	4AF2	19186	UInt, 1=1	UInt	
2663	FB S3/Wr3	0	42803	167/217	4AF3	19187	UInt, 1=1	UInt	
2664	FB S4/Wr4	0	42804	167/218	4AF4	19188	UInt, 1=1	UInt	
2665	FB S5/Wr5	0	42805	167/219	4AF5	19189	UInt, 1=1	UInt	
2666	FB S6/Wr6	0	42806	167/220	4AF6	19190	UInt, 1=1	UInt	
2667	FB S7/Wr7	0	42807	167/221	4AF7	19191	UInt, 1=1	UInt	
2668	FB S8/Wr8	0	42808	167/222	4AF8	19192	UInt, 1=1	UInt	
2669	FB S9/Rd1	0	42809	167/223	4AF9	19193	UInt, 1=1	UInt	
266A	FB S10/Rd2	0	42810	167/224	4AFA	19194	UInt, 1=1	UInt	
266B	FB S11/Rd3	0	42811	167/225	4AFB	19195	UInt, 1=1	UInt	
266C	FB S12/Rd4	0	42812	167/226	4AFC	19196	UInt, 1=1	UInt	
266D	FB S13/Rd5	0	42813	167/227	4AFD	19197	UInt, 1=1	UInt	
266E	FB S14/Rd6	0	42814	167/228	4AFE	19198	UInt, 1=1	UInt	
266F	FB S15/Rd7	0	42815	167/229	4AFF	19199	UInt, 1=1	UInt	
266G	FB S16/Rd8	0	42816	167/230	4B00	19200	UInt, 1=1	UInt	
269	FB Status								
270	Wireless [270]								
271	WirelessMode	Off	40200	157/164	40C8	16584	UInt	UInt	
272	WiFi Options [272]								
2721	WiFi Mode	AccessPoint	40201	157/165	40C9	16585	UInt	UInt	
2722	Channel	5	40202	157/166	40CA	16586	UInt, 1=1	UInt	
2723	Encryption	WPA2	40203	157/167	40CB	16587	UInt	UInt	
2724	DHCP	DHCP	40204	157/168	40CC	16588	UInt	UInt	
2725	SSID	Omron_<5 random digits>	40215	157/179	40D7	16699	UInt	UInt	
2726	Password	12345678	40235	157/199	40EB	16619	UInt	UInt	
2727	IP Address	192.168.1.3	40255	157/219	40FF	16639	UInt, 1=1	UInt	
			40256	157/220	4100	16640	UInt, 1=1	UInt	
			40257	157/221	4101	16641	UInt, 1=1	UInt	
			40258	157/222	4102	16642	UInt, 1=1	UInt	

Menu Parameters		Default settings	Modbus Instance/ Device Net No.	Profibus slot/index	EtherCAT index (HEX)	Profinet index	Fieldbus format	Modbus format	Notes
2728	Subnet Mask	255.255.255.0	40259	157/223	4103	16643	UInt, 1=1	UInt	
			40260	157/224	4104	16644	UInt, 1=1	UInt	
			40261	157/225	4105	16645	UInt, 1=1	UInt	
			40262	157/226	4106	16646	UInt, 1=1	UInt	
2729	Gateway	192.168.1.3	40263	157/227	4107	16647	UInt, 1=1	UInt	
			40264	157/228	4108	16648	UInt, 1=1	UInt	
			40265	157/229	4109	16649	UInt, 1=1	UInt	
			40266	157/230	410A	16650	UInt, 1=1	UInt	
272A	WiFi Status	OK	30054	117/218	2036	54	UInt	UInt	
273	Bluetooth (BLE) options [273]								
2731	BluetoothID	0.0.0.0	42620	167/34	4A3C	19004	UInt, 1=1	UInt	
2732	Paring Key	123456	40267	157/231	410B	16651	UInt, 1=1	UInt	
274	Security [274]								
2741	Sec. Mode	Open	40273	157/237	4111	16657	UInt	UInt	
2742	Password	Empty string	40274	157/238	4112	16658	UInt	UInt	
300	Process and Application Parameters [300]								
310	Set/View ref		42991	168/150	4BAF	19375	Long, 1=0.001	EInt	
320	Process Settings [320]								
321	Proc Source	Speed	43302	169/206	4CE6	19686	UInt	UInt	
322	Proc Unit	Off	43303	169/207	4CE7	19687	UInt	UInt	
323	User Unit	0	43304	169/208	4CE8	19688	UInt	UInt	
			43305	169/209	4CE9	19689	UInt	UInt	
			43306	169/210	4CEA	19690	UInt	UInt	
			43307	169/211	4CEB	19691	UInt	UInt	
			43308	169/212	4CEC	19692	UInt	UInt	
			43309	169/213	4CED	19693	UInt	UInt	
324	Process Min	0	43310	169/214	4CEE	19694	Long, 1=0.001	EInt	
325	Process Max	0	43311	169/215	4CEF	19695	Long, 1=0.001	EInt	
326	Ratio	Linnear	43312	169/216	4CF0	19696	UInt	UInt	
327	F(Val) PrMin	Min	43313	169/217	4CF1	19697	Long, 1=1	EInt	
328	F(Val) PrMax	Max	43314	169/218	4CF2	19698	Long, 1=1	EInt	
330	Start/Stop settings [330]								
331	Acc Time	10s	43101	169/5	4C1D	19485	Long, 1=0.01s	EInt	
332	Dec Time	10s	43102	169/6	4C1E	19486	Long, 1=0.01s	EInt	
333	Acc MotPot	16s	43103	169/7	4C1F	19487	Long, 1=0.01s	EInt	

Menu Parameters		Default settings	Modbus Instance/ Device Net No.	Profibus slot/index	EtherCAT index (HEX)	Profinet index	Fieldbus format	Modbus format	Notes
334	Dec MotPot	16s	43104	169/8	4C20	19488	Long, 1=0.01s	EInt	
335	Acc<Min Spd	10s	43105	169/9	4C21	19489	Long, 1=0.01s	EInt	
336	Dec<Min Spd	10s	43106	169/10	4C22	19490	Long, 1=0.01s	EInt	
337	Acc Rmp	Linear	43107	169/11	4C23	19491	UInt	UInt	
338	Dec Rmp	Linear	43108	169/12	4C24	19492	UInt	UInt	
339	Start Mode	Fast	43109	169/13	4C25	19493	UInt	UInt	
33A	Spinstart	Off	43110	169/14	4C26	19494	UInt	UInt	
33B	Stop Mode	Decel	43111	169/15	4C27	19495	UInt	UInt	
33C	Brk Release	0s	43112	169/16	4C28	19496	Long, 1=0.01s	EInt	
33D	Release Spd	0rpm	43113	169/17	4C29	19497	Int, 1=1rpm	Int	
33E	Brk Engage	0s	43114	169/18	4C2A	19498	Long, 1=0.01s	EInt	
33F	Brk Wait	0s	43115	169/19	4C2B	19499	Long, 1=0.01s	EInt	
33G	Vector Brake	Off	43116	169/20	4C2C	19500	UInt	UInt	
33H	Brk Fault	1s	43117	169/21	4C2D	19501	Long, 1=0.01s	EInt	
33I	Release Trq	0%	43118	169/22	4C2E	19502	Long, 1=1%	EInt	
33K	Start Vector	Normal (U)	43119	169/23	4C2F	19503	UInt	UInt	
340	Speed [340]								
341	Min Speed	0rpm	43121	169/25	4C31	19505	Int, 1=1rpm	Int	
342	Stp<MinSpd	Off	43122	169/26	4C32	19506	Long, 1=0.01s	EInt	
343	Max Speed	Sync speed	43123	169/27	4C33	19507	Int, 1=1rpm	Int	
344	SkipSpd 1 Lo	0rpm	43124	169/28	4C34	19508	Int, 1=1rpm	Int	
345	SkipSpd 1 Hi	0rpm	43125	169/29	4C35	19509	Int, 1=1rpm	Int	
346	SkipSpd 2 Lo	0rpm	43126	169/30	4C36	19510	Int, 1=1rpm	Int	
347	SkipSpd 2 Hi	0rpm	43127	169/31	4C37	19511	Int, 1=1rpm	Int	
348	Jog Speed	50rpm	43128	169/32	4C38	19512	Int, 1=1rpm	Int	
349	Droop Speed	0%	43120	169/24	4C30	19504	Long, 1=0.01%	EInt	
350	Torques [350]								
351	Max Torque	120%	43141	169/45	4C45	19525	Long, 1=1%	EInt	
352	IxR Comp	Off	43142	169/46	4C46	19526	UInt	UInt	
353	IxR CompUsr	0%	43143	169/47	4C47	19527	Long, 1=0.1%	EInt	
354	Flux optim	Off	43144	169/48	4C48	19528	UInt	UInt	
355	Max Power	Off	43145	169/49	4C49	19529	Long, 1=1%	EInt	
360	Preset References [360]								
361	Motor Pot	Non volatile	43131	169/35	4C3B	19515	UInt	UInt	
362	Preset Ref 1	0	43132	169/36	4C3C	19516	Long, 1=0.001	EInt	
363	Preset Ref 2	250	43133	169/37	4C3D	19517	Long, 1=0.001	EInt	
364	Preset Ref 3	500	43134	169/38	4C3E	19518	Long, 1=0.001	EInt	
365	Preset Ref 4	750	43135	169/39	4C3F	19519	Long, 1=0.001	EInt	

Menu Parameters		Default settings	Modbus Instance/ Device Net No.	Profibus slot/index	EtherCAT index (HEX)	Profinet index	Fieldbus format	Modbus format	Notes
366	Preset Ref 5	1000	43136	169/40	4C40	19520	Long, 1=0.001	EInt	
367	Preset Ref 6	1250	43137	169/41	4C41	19521	Long, 1=0.001	EInt	
368	Preset Ref 7	1500	43138	169/42	4C42	19522	Long, 1=0.001	EInt	
369	Key Ref Mode	MotPot	43139	169/43	4C43	19523	UInt	UInt	
380	PID Process Control [380]								
381	PID Control	Off	43154	169/58	4C52	19538	UInt	UInt	
383	PID P Gain	1	43156	169/60	4C54	19540	Long, 1=0.1	EInt	
384	PID I Time	1s	43157	169/61	4C55	19541	Long, 1=0.01s	EInt	
385	PID D Time	0s	43158	169/62	4C56	19542	Long, 1=0.01s	EInt	
386	PID<MinSpd	Off	43371	170/20	4D2B	19755	Long, 1=0.01s	EInt	
387	PID Act Marg	0	43372	170/21	4D2C	19756	Long, 1=0.001	EInt	
388	PID Stdy Tst	Off	43373	170/22	4D2D	19757	Long, 1=0.01s	EInt	
389	PID Stdy Mar	0	43374	170/23	4D2E	19758	Long, 1=0.001	EInt	
390	Pump/Fan Control [390]								
391	Pump enable	Off	43161	169/65	4C59	19545	UInt	UInt	
392	No of Drives	2	43162	169/66	4C5A	19546	UInt, 1=1	UInt	
393	Select Drive	Sequence	43163	169/67	4C5B	19547	UInt	UInt	
394	Change Cond	Both	43164	169/68	4C5C	19548	UInt	UInt	
395	Change Timer	50h	43165	169/69	4C5D	19549	UInt, 1=1h	UInt	
396	Drives on Ch	0	43166	169/70	4C5E	19550	UInt, 1=1	UInt	
397	Upper Band	10%	43167	169/71	4C5F	19551	Long, 1=1%	EInt	
398	Lower Band	10%	43168	169/72	4C60	19552	Long, 1=1%	EInt	
399	Start Delay	0s	43169	169/73	4C61	19553	Long, 1=1s	EInt	
39A	Stop Delay	0s	43170	169/74	4C62	19554	Long, 1=1s	EInt	
39B	Upp Band Lim	0%	43171	169/75	4C63	19555	Long, 1=1%	EInt	
39C	Low Band Lim	0%	43172	169/76	4C64	19556	Long, 1=1%	EInt	
39D	Settle Start	0s	43173	169/77	4C65	19557	Long, 1=1s	EInt	
39E	TransS Start	60%	43174	169/78	4C66	19558	Long, 1=1%	EInt	
39F	Settle Stop	0s	43175	169/79	4C67	19559	Long, 1=1s	EInt	
39G	TransS Stop	60%	43176	169/80	4C68	19560	Long, 1=1%	EInt	
39H	Run Time 1		31051	121/195	241B	1051	Long, 1=1h	EInt	
			31052	121/196	241C	1052	Long, 1=1m	EInt	
			31053	121/197	241D	1053	Long, 1=1s	EInt	
39H1	Rst Run Tm1	No	38	0/37	2026	38	UInt	UInt	
39I	Run Time 2		31054	121/198	241E	1054	Long, 1=1h	EInt	
			31055	121/199	241F	1055	Long, 1=1m	EInt	
			31056	121/200	2420	1056	Long, 1=1s	EInt	
39I1	Rst Run Tm2		39	0/38	2027	39	UInt	UInt	

Menu Parameters		Default settings	Modbus Instance/ Device Net No.	Profibus slot/index	EtherCAT index (HEX)	Profinet index	Fieldbus format	Modbus format	Notes
39J	Run Time 3		31057	121/201	2421	1057	Long, 1=1h	EInt	
			31058	121/202	2422	1058	Long, 1=1m	EInt	
			31059	121/203	2423	1059	Long, 1=1s	EInt	
39J1	Rst Run Tm3	No	40	0/39	2028	40	UInt	UInt	
39K	Run Time 4		31060	121/204	2424	1060	Long, 1=1h	EInt	
			31061	121/205	2425	1061	Long, 1=1m	EInt	
			31062	121/206	2426	1062	Long, 1=1s	EInt	
39K1	Rst Run Tm4	No	41	0/40	2029	41	UInt	UInt	
39L	Run Time 5		31063	121/207	2427	1063	Long, 1=1h	EInt	
			31064	121/208	2428	1064	Long, 1=1m	EInt	
			31065	121/209	2429	1065	Long, 1=1s	EInt	
39L1	Rst Run Tm5	No	42	0/41	202A	42	UInt	UInt	
39M	Run Time 6		31066	121/210	242A	1066	Long, 1=1h	EInt	
			31067	121/211	242B	1067	Long, 1=1m	EInt	
			31068	121/212	242C	1068	Long, 1=1s	EInt	
39M1	Rst Run Tm6	No	43	0/42	202B	43	UInt	UInt	
39N	Pump 123456		31069	121/213	242D	1069	UInt, 1=1	UInt	
39P	No of Backup	0	43177	169/81	4C69	19561	UInt, 1=1	UInt	
400	Load Monitor and Process Protection [400]								
410	Load Monitor [410]								
411	Alarm Select	Off	43321	169/225	4CF9	19705	UInt	UInt	
412	Alarm trip	Off	43322	169/226	4CFA	19706	UInt	UInt	
413	Ramp Alarm	Off	43323	169/227	4CFB	19707	UInt	UInt	
414	Start Delay	2s	43324	169/228	4CFC	19708	Long, 1=1s	EInt	
415	Load Type	Basic	43325	169/229	4CFD	19709	UInt	UInt	
416	Max Alarm [416]								
4161	MaxAlarmMar	15%	43326	169/230	4CFE	19710	Long, 1=1%	EInt	
4162	MaxAlarmDel	0,1s	43330	169/234	4D02	19714	Long, 1=0.1s	EInt	
417	Max Pre Alarm [417]								
4171	MaxPreAlMar	10%	43327	169/231	4CFF	19711	Long, 1=1%	EInt	
4172	MaxAlarmDel	0.1s	43331	169/235	4D03	19715	Long, 1=0.1s	EInt	
418	Min Pre Alarm [418]								
4181	MinPreAlMar	10%	43328	169/232	4D00	19712	Long, 1=1%	EInt	
4182	MinPreAlDel	0.1s	43332	169/236	4D04	19716	Long, 1=0.1s	EInt	
419	Min Alarm [419]								

Menu Parameters		Default settings	Modbus Instance/ Device Net No.	Profibus slot/index	EtherCAT index (HEX)	Profinet index	Fieldbus format	Modbus format	Notes
4191	MinAlarmMar	15%	43329	169/233	4D01	19713	Long, 1=1%	EInt	
4192	MinAlarmDel	0.1s	43333	169/237	4D05	19717	Long, 1=0.1s	EInt	
41A	AutoSet Alrm	No	43334	169/238	4D06	19718	UInt	UInt	
41B	Normal Load	100%	43335	169/239	4D07	19719	Long, 1=1%	EInt	
41C	Load Curve [41C]								
41C1	Load Curve1	100%	43336	169/240	4D08	19720	Long, 1=1%	EInt	
			43337	169/241	4D09	19721	Int, 1=1rpm	Int	
41C2	Load Curve 2	100%	43338	169/242	4D0A	19722	Long, 1=1%	EInt	
			43339	169/243	4D0B	19723	Int, 1=1rpm	Int	
41C3	Load Curve 3	100%	43340	169/244	4D0C	19724	Long, 1=1%	EInt	
			43341	169/245	4D0D	19725	Int, 1=1rpm	Int	
41C4	Load Curve 4	100%	43342	169/246	4D0E	19726	Long, 1=1%	EInt	
			43343	169/247	4D0F	19727	Int, 1=1rpm	Int	
41C5	Load Curve 5	100%	43344	169/248	4D10	19728	Long, 1=1%	EInt	
			43345	169/249	4D11	19729	Int, 1=1rpm	Int	
41C6	Load Curve 6	100%	43346	169/250	4D12	19730	Long, 1=1%	EInt	
			43347	169/251	4D13	19731	Int, 1=1rpm	Int	
41C7	Load Curve 7	100%	43348	169/252	4D14	19732	Long, 1=1%	EInt	
			43349	169/253	4D15	19733	Int, 1=1rpm	Int	
41C8	Load Curve 8	100%	43350	169/254	4D16	19734	Long, 1=1%	EInt	
			43351	170/0	4D17	19735	Int, 1=1rpm	Int	
41C9	Load Curve 9	100%	43352	170/1	4D18	19736	Long, 1=1%	EInt	
			43353	170/2	4D19	19737	Int, 1=1rpm	Int	
41D	MinAbsMarg	3%	43354	170/3	4D1A	19738	Long, 1=1%	EInt	
420	Process Protection [420]								
421	Low Volt OR	On	43361	170/10	4D21	19745	UInt	UInt	
422	Rotor locked	Off	43362	170/11	4D22	19746	UInt	UInt	
423	Motor lost	Off	43363	170/12	4D23	19747	UInt	UInt	
424	OverVolt Ctl	On	43364	170/13	4D24	19748	UInt	UInt	
500	I/Os and Virtual Connections [500]								
510	Analogue Inputs [510]								
511	AnIn1 Fc	Process Ref	43201	169/105	4C81	19585	UInt	UInt	
512	AnIn1 Setup	4-20mA	43202	169/106	4C82	19586	UInt	UInt	
513	AnIn1 Advan								
5131	AnIn1 Min	4mA	43203	169/107	4C83	19587	Long, 1=0.01	EInt	
5132	AnIn1 Max	20mA	43204	169/108	4C84	19588	Long, 1=0.01	EInt	

Menu Parameters		Default settings	Modbus Instance/ Device Net No.	Profibus slot/index	EtherCAT index (HEX)	Profinet index	Fieldbus format	Modbus format	Notes
5133	AnIn1 Bipol	20mA	43205	169/109	4C85	19589	Long, 1=0.01	EInt	
5134	AnIn1 FcMin	Min	43206	169/110	4C86	19590	UInt	UInt	
5135	AnIn1 VaMin	0	43541	170/190	4DD5	19925	Long, 1=0.001	EInt	
5136	AnIn1 FcMax	Max	43207	169/111	4C87	19591	UInt	UInt	
5137	AnIn1 VaMax	0	43551	170/200	4DDF	19935	Long, 1=0.001	EInt	
5138	AnIn1 Oper	Add +	43208	169/112	4C88	19592	UInt	UInt	
5139	AnIn1 Filt	0.1s	43209	169/113	4C89	19593	Long, 1=0.001s	EInt	
513A	AnIn1 Enabl	On	43210	169/114	4C8A	19594	UInt	UInt	
514	AnIn2 Fc	Off	43211	169/115	4C8B	19595	UInt	UInt	
515	AnIn2 Setup	4-20mA	43212	169/116	4C8C	19596	UInt	UInt	
516	AnIn2 Advan								
5161	AnIn2 Min	4mA	43213	169/117	4C8D	19597	Long, 1=0.01	EInt	
5162	AnIn2 Max	20mA	43214	169/118	4C8E	19598	Long, 1=0.01	EInt	
5163	AnIn2 Bipol	20mA	43215	169/119	4C8F	19599	Long, 1=0.01	EInt	
5164	AnIn2 FcMin	Min	43216	169/120	4C90	19600	UInt	UInt	
5165	AnIn2 VaMin	0	43542	170/191	4DD6	19926	Long, 1=0.001	EInt	
5166	AnIn2 FcMax	Max	43217	169/121	4C91	19601	UInt	UInt	
5167	AnIn2 VaMax	0	43552	170/201	4DE0	19936	Long, 1=0.001	EInt	
5168	AnIn2 Oper	Add +	43218	169/122	4C92	19602	UInt	UInt	
5169	AnIn2 Filt	0,1s	43219	169/123	4C93	19603	Long, 1=0.001s	EInt	
516A	AnIn2 Enabl	On	43220	169/124	4C94	19604	UInt	UInt	
517	AnIn3 Fc	Off	43221	169/125	4C95	19605	UInt	UInt	
518	AnIn3 Setup	4-20mA	43222	169/126	4C96	19606	UInt	UInt	
519	AnIn3 Advan								
5191	AnIn3 Min	4mA	43223	169/127	4C97	19607	Long, 1=0.01	EInt	
5192	AnIn3 Max	20mA	43224	169/128	4C98	19608	Long, 1=0.01	EInt	
5193	AnIn3 Bipol	20mA	43225	169/129	4C99	19609	Long, 1=0.01	EInt	
5194	AnIn3 FcMin	Min	43226	169/130	4C9A	19610	UInt	UInt	
5195	AnIn3 VaMin	0	43543	170/192	4DD7	19927	Long, 1=0.001	EInt	
5196	AnIn3 FcMax	Max	43227	169/131	4C9B	19611	UInt	UInt	
5197	AnIn3 VaMax	0	43553	170/202	4DE1	19937	Long, 1=0.001	EInt	
5198	AnIn3 Oper	Add +	43228	169/132	4C9C	19612	UInt	UInt	
5199	AnIn3 Filt	0,1s	43229	169/133	4C9D	19613	Long, 1=0.001s	EInt	
519A	AnIn3 Enabl	On	43230	169/134	4C9E	19614	UInt	UInt	
51A	AnIn4 Fc	Off	43231	169/135	4C9F	19615	UInt	UInt	
51B	AnIn4 Setup	4-20mA	43232	169/136	4CA0	19616	UInt	UInt	
51C	AnIn4 Advan								
51C1	AnIn4 Min	4mA	43233	169/137	4CA1	19617	Long, 1=0.01	EInt	

Menu Parameters		Default settings	Modbus Instance/ Device Net No.	Profibus slot/index	EtherCAT index (HEX)	Profinet index	Fieldbus format	Modbus format	Notes
51C2	AnIn4 Max	20mA	43234	169/138	4CA2	19618	Long, 1=0.01	EInt	
51C3	AnIn4 Bipol	20mA	43235	169/139	4CA3	19619	Long, 1=0.01	EInt	
51C4	AnIn4 FcMin	Min	43236	169/140	4CA4	19620	UInt	UInt	
51C5	AnIn4 VaMin	0	43544	170/193	4DD8	19928	Long, 1=0.001	EInt	
51C6	AnIn4 FcMax	Max	43237	169/141	4CA5	19621	UInt	UInt	
51C7	AnIn4 VaMax	0	43554	170/203	4DE2	19938	Long, 1=0.001	EInt	
51C8	AnIn4 Oper	Add +	43238	169/142	4CA6	19622	UInt	UInt	
51C9	AnIn4 Filt	0,1s	43239	169/143	4CA7	19623	Long, 1=0.001s	EInt	
51CA	AnIn4 Enabl	On	43240	169/144	4CA8	19624	UInt	UInt	
520	Digital Inputs [520]								
521	DigIn 1	RunL	43241	169/145	4CA9	19625	UInt	UInt	
522	DigIn 2	RunR	43242	169/146	4CAA	19626	UInt	UInt	
523	DigIn 3	Off	43243	169/147	4CAB	19627	UInt	UInt	
524	DigIn 4	Off	43244	169/148	4CAC	19628	UInt	UInt	
525	DigIn 5	Off	43245	169/149	4CAD	19629	UInt	UInt	
526	DigIn 6	Off	43246	169/150	4CAE	19630	UInt	UInt	
527	DigIn 7	Off	43247	169/151	4CAF	19631	UInt	UInt	
528	DigIn 8	Reset	43248	169/152	4CB0	19632	UInt	UInt	
529	B1 DigIn 1	Off	43501	170/150	4DAD	19885	UInt	UInt	
52A	B1 DigIn 2	Off	43502	170/151	4DAE	19886	UInt	UInt	
52B	B1 DigIn 3	Off	43503	170/152	4DAF	19887	UInt	UInt	
52C	B2 DigIn 1	Off	43504	170/153	4DB0	19888	UInt	UInt	
52D	B2 DigIn 2	Off	43505	170/154	4DB1	19889	UInt	UInt	
52E	B2 DigIn 3	Off	43506	170/155	4DB2	19890	UInt	UInt	
52F	B3 DigIn 1	Off	43507	170/156	4DB3	19891	UInt	UInt	
52G	B3 DigIn 2	Off	43508	170/157	4DB4	19892	UInt	UInt	
52H	B3 DigIn 3	Off	43509	170/158	4DB5	19893	UInt	UInt	
530	Analogue Outputs [530]								
531	AnOut1 Fc	Speed	43251	169/155	4CB3	19635	UInt	UInt	
532	AnOut1 Setup	4-20mA	43252	169/156	4CB4	19636	UInt	UInt	
533	AnOut 1 Advan								
5331	AnOut 1 Min	4mA	43253	169/157	4CB5	19637	Long, 1=0.01	EInt	
5332	AnOut 1 Max	20mA	43254	169/158	4CB6	19638	Long, 1=0.01	EInt	
5333	AnOut1Bipol	20mA	43255	169/159	4CB7	19639	Long, 1=0.01	EInt	
5334	AnOut1FCMin	Min	43256	169/160	4CB8	19640	UInt	UInt	
5335	AnOut1VaMin	0	43545	170/194	4DD9	19929	Long, 1=0.001	EInt	
5336	AnOut1FCMax	Max	43257	169/161	4CB9	19641	UInt	UInt	
5337	AnOut1VaMax	0	43555	170/204	4DE3	19939	Long, 1=0.001	EInt	

Menu Parameters		Default settings	Modbus Instance/ Device Net No.	Profibus slot/index	EtherCAT index (HEX)	Profinet index	Fieldbus format	Modbus format	Notes
534	AnOut2 Fc	Torque	43261	169/165	4CBD	19645	UInt	UInt	
535	AnOut2 Setup	4-20mA	43262	169/166	4CBE	19646	UInt	UInt	
536	AnOut2 Advan								
5361	AnOut2 Min	4mA	43263	169/167	4CBF	19647	Long, 1=0.01	EInt	
5362	AnOut2 Max	20mA	43264	169/168	4CC0	19648	Long, 1=0.01	EInt	
5363	AnOut2Bipol	20mA	43265	169/169	4CC1	19649	Long, 1=0.01	EInt	
5364	AnOut2FcMin	Min	43266	169/170	4CC2	19650	UInt	UInt	
5365	AnOut2VaMin	0	43546	170/195	4DDA	19930	Long, 1=0.001	EInt	
5366	AnOut2FcMax	Max	43267	169/171	4CC3	19651	UInt	UInt	
5367	AnOut2VaMax	0	43556	170/205	4DE4	19940	Long, 1=0.001	EInt	
540	Digital Outputs [540]								
541	DigOut 1	Ready	43271	169/175	4CC7	19655	UInt	UInt	
542	DigOut2	No Trip	43272	169/176	4CC8	19656	UInt	UInt	
550	Relays [550]								
551	Relay 1	Trip	43273	169/177	4CC9	19657	UInt	UInt	
552	Relay 2	Run	43274	169/178	4CCA	19658	UInt	UInt	
553	Relay 3	Off	43275	169/179	4CCB	19659	UInt	UInt	
554	B1 Relay 1	Off	43511	170/160	4DB7	19895	UInt	UInt	
555	B1 Relay 2	Off	43512	170/161	4DB8	19896	UInt	UInt	
556	B1 Relay 3	Off	43513	170/162	4DB9	19897	UInt	UInt	
557	B2 Relay 1	Off	43514	170/163	4DBA	19898	UInt	UInt	
558	B2 Relay 2	Off	43515	170/164	4DBB	19899	UInt	UInt	
559	B2 Relay 3	Off	43516	170/165	4DBC	19900	UInt	UInt	
55A	B3 Relay 1	Off	43517	170/166	4DBD	19901	UInt	UInt	
55B	B3 Relay 2	Off	43518	170/167	4DBE	19902	UInt	UInt	
55C	B3 Relay 3	Off	43519	170/168	4DBF	19903	UInt	UInt	
55D	Relay Advan								
55D1	Relay1 Mode	N.O	43276	169/180	4CCC	19660	UInt	UInt	
55D2	Relay2 Mode	N.O	43277	169/181	4CCD	19661	UInt	UInt	
55D3	Relay3 Mode	N.O	43278	169/182	4CCE	19662	UInt	UInt	
55D4	B1R1 Mode	N.O	43521	170/170	4DC1	19905	UInt	UInt	
55D5	B1R2 Mode	N.O	43522	170/171	4DC2	19906	UInt	UInt	
55D6	B1R3 Mode	N.O	43523	170/172	4DC3	19907	UInt	UInt	
55D7	B2R1 Mode	N.O	43524	170/173	4DC4	19908	UInt	UInt	
55D8	B2R2 Mode	N.O	43525	170/174	4DC5	19909	UInt	UInt	
55D9	B2R3 Mode	N.O	43526	170/175	4DC6	19910	UInt	UInt	
55DA	B3R1 Mode	N.O	43527	170/176	4DC7	19911	UInt	UInt	
55DB	B3R2 Mode	N.O	43528	170/177	4DC8	19912	UInt	UInt	
55DC	B3R3 Mode	N.O	43529	170/178	4DC9	19913	UInt	UInt	

Menu Parameters		Default settings	Modbus Instance/ Device Net No.	Profibus slot/index	EtherCAT index (HEX)	Profinet index	Fieldbus format	Modbus format	Notes
560	Virtual Connections [560]								
561	VIO 1 Dest	Off	43281	169/185	4CD1	19665	UInt	UInt	
562	VIO 1 Source	Off	43282	169/186	4CD2	19666	UInt	UInt	
563	VIO 2 Dest	Off	43283	169/187	4CD3	19667	UInt	UInt	
564	VIO 2 Source	Off	43284	169/188	4CD4	19668	UInt	UInt	
565	VIO 3 Dest	Off	43285	169/189	4CD5	19669	UInt	UInt	
566	VIO 3 Source	Off	43286	169/190	4CD6	19670	UInt	UInt	
567	VIO 4 Dest	Off	43287	169/191	4CD7	19671	UInt	UInt	
568	VIO 4 Source	Off	43288	169/192	4CD8	19672	UInt	UInt	
569	VIO 5 Dest	Off	43289	169/193	4CD9	19673	UInt	UInt	
56A	VIO 5 Source	Off	43290	169/194	4CDA	19674	UInt	UInt	
56B	VIO 6 Dest	Off	43291	169/195	4CDB	19675	UInt	UInt	
56C	VIO 6 Source	Off	43292	169/196	4CDC	19676	UInt	UInt	
56D	VIO 7 Dest	Off	43293	169/197	4CDD	19677	UInt	UInt	
56E	VIO 7 Source	Off	43294	169/198	4CDE	19678	UInt	UInt	
56F	VIO 8 Dest	Off	43295	169/199	4CDF	19679	UInt	UInt	
56G	VIO 8 Source	Off	43296	169/200	4CE0	19680	UInt	UInt	
600	Logical Functions and Timers [600]								
610	Comparators [610]								
611	Setup Analogue Comparator 1 [611]								
6111	CA1 Value	Speed	43400	170/49	4D48	19784	UInt	UInt	
6112	CA1 LevelHI	300rpm	43401	170/50	4D49	19785	Long, 1=0.001	EInt	
6113	CA1 LevelLO	200rpm	43402	170/51	4D4A	19786	Long, 1=0.001	EInt	
6114	CA1 Type	Hysteresis	43403	170/52	4D4B	19787	UInt	UInt	
6115	CA1 Polar	Unipolar	43404	170/53	4D4C	19788	UInt	UInt	
6116	CA1 Set Dly	0s	43405	170/54	4D4D	19789	Long, 1=1s	EInt	
6117	CA1 Res Dly	0s	43406	170/55	4D4E	19790	Long, 1=1s	EInt	
6118	CA1 Tmr Val	0s	43407	170/56	4D4F	19791	Long, 1=1s	EInt	
612	CA2 Setup [612]								
6121	CA2 Value	Torque	43408	170/57	4D50	19792	UInt	UInt	
6122	CA2 LevelHI	20	43409	170/58	4D51	19793	Long, 1=0.001	EInt	
6123	CA2 LevelLO	10	43410	170/59	4D52	19794	Long, 1=0.001	EInt	
6124	CA2 Type	Hysteresis	43411	170/60	4D53	19795	UInt	UInt	
6125	CA2 Polar	Unipolar	43412	170/61	4D54	19796	UInt	UInt	
6126	CA2 Set Dly	0s	43413	170/62	4D55	19797	Long, 1=1s	EInt	

Menu Parameters		Default settings	Modbus Instance/ Device Net No.	Profibus slot/index	EtherCAT index (HEX)	Profinet index	Fieldbus format	Modbus format	Notes
6127	CA2 Res Dly	0s	43414	170/63	4D56	19798	Long, 1=1s	EInt	
6128	CA2 Tmr Val	0s	43415	170/64	4D57	19799	Long, 1=1s	EInt	
613	CA3 Setup [613]								
6131	CA3 Value	Process Val	43416	170/65	4D58	19800	UInt	UInt	
6132	CA3 LevelHI	300	43417	170/66	4D59	19801	Long, 1=0.001	EInt	
6133	CA3 LevelLO	200	43418	170/67	4D5A	19802	Long, 1=0.001	EInt	
6134	CA3 Type	Hysteresis	43419	170/68	4D5B	19803	UInt	UInt	
6135	CA3 Polar	Unipolar	43420	170/69	4D5C	19804	UInt	UInt	
6136	CA3 Set Dly	0s	43421	170/70	4D5D	19805	Long, 1=1s	EInt	
6137	CA3 Res Dly	0s	43422	170/71	4D5E	19806	Long, 1=1s	EInt	
6138	CA3 Tmr Val	0s	43423	170/72	4D5F	19807	Long, 1=1s	EInt	
614	CA4 Setup [614]								
6141	CA4 Value	Process Err	43424	170/73	4D60	19808	UInt	UInt	
6142	CA4 LevelHI	100	43425	170/74	4D61	19809	Long, 1=0.001	EInt	
6143	CA4 LevelLO	-100	43426	170/75	4D62	19810	Long, 1=0.001	EInt	
6144	CA4 Type	Window	43427	170/76	4D63	19811	UInt	UInt	
6145	CA4 Polar	Bipolar	43428	170/77	4D64	19812	UInt	UInt	
6146	CA4 Set Dly	0s	43429	170/78	4D65	19813	Long, 1=1s	EInt	
6147	CA4 Res Dly	0s	43430	170/79	4D66	19814	Long, 1=1s	EInt	
6148	CA4 Tmr Val	0s	43431	170/80	4D67	19815	Long, 1=1s	EInt	
620	Analogue Multiplexer [620]								
621	AnMux1								
6211	AnMux InA	Process Val	43432	170/81	4D68	19816	UInt	UInt	
6212	AnMux InB	Process Val	43433	170/82	4D69	19817	UInt	UInt	
6213	Operator	Off	43434	170/83	4D6A	19818	UInt	UInt	
622	AnMux2								
6221	AnMux InA	Process Val	43435	170/84	4D6B	19819	UInt	UInt	
6222	AnMux InB	Process Val	43436	170/85	4D6C	19820	UInt	UInt	
6223	Operator	Off	43437	170/86	4D6D	19821	UInt	UInt	
630	Not Gate [630]								
631	NOT1 Input	Off	43438	170/87	4D6E	19822	UInt	UInt	
632	NOT2 Input	Off	43439	170/88	4D6F	19823	UInt	UInt	
633	NOT3 Input	Off	43440	170/89	4D70	19824	UInt	UInt	
634	NOT4 Input	Off	43441	170/90	4D71	19825	UInt	UInt	
635	NOT5 Input	Off	43442	170/91	4D72	19826	UInt	UInt	
636	NOT6 Input	Off	43443	170/92	4D73	19827	UInt	UInt	
637	NOT7 Input	Off	43444	170/93	4D74	19828	UInt	UInt	

Menu Parameters		Default settings	Modbus Instance/ Device Net No.	Profibus slot/index	EtherCAT index (HEX)	Profinet index	Fieldbus format	Modbus format	Notes
638	NOT8 Input	Off	43445	170/94	4D75	19829	UInt	UInt	
640	Logic output [640]								
641	Logic Output 1 [641]		31093	121/237	2445	1093	UInt, 1=1	UInt	
6411	L1 Expr	((1.2).3).4	43450	170/99	4D7A	19834	UInt	UInt	
6412	L1 Input 1	CA1	43451	170/100	4D7B	19835	UInt	UInt	
6413	L1 Op 1	&	43452	170/101	4D7C	19836	UInt	UInt	
6414	L1 Input 2	NOT1	43453	170/102	4D7D	19837	UInt	UInt	
6415	L1 Op 2	&	43454	170/103	4D7E	19838	UInt	UInt	
6416	L1 Input 3	Run	43455	170/104	4D7F	19839	UInt	UInt	
6417	L1 Op 3	.	43456	170/105	4D80	19840	UInt	UInt	
6418	L1 Input 4	Off	43457	170/106	4D81	19841	UInt	UInt	
6419	L1 Set Dly	0s	43458	170/107	4D82	19842	Long, 1=1s	EInt	
641A	L1 Res Dly	0s	43459	170/108	4D83	19843	Long, 1=1s	EInt	
641B	L1 Tmr Val	0s	43460	170/109	4D84	19844	Long, 1=1s	EInt	
642	Logic 2		31094	121/238	2446	1094	UInt, 1=1	UInt	
6421	L2 Expr	((1.2).3).4	43461	170/110	4D85	19845	UInt	UInt	
6422	L2 Input 1	CA1	43462	170/111	4D86	19846	UInt	UInt	
6423	L2 Op 1	&	43463	170/112	4D87	19847	UInt	UInt	
6424	L2 Input 2	NOT1	43464	170/113	4D88	19848	UInt	UInt	
6425	L2 Op 2	&	43465	170/114	4D89	19849	UInt	UInt	
6426	L2 Input 3	Run	43466	170/115	4D8A	19850	UInt	UInt	
6427	L2 Op 3	.	43467	170/116	4D8B	19851	UInt	UInt	
6428	L2 Input 4	Off	43468	170/117	4D8C	19852	UInt	UInt	
6429	L2 Set Dly	0s	43469	170/118	4D8D	19853	Long, 1=1s	EInt	
642A	L2 Res Dly	0s	43470	170/119	4D8E	19854	Long, 1=1s	EInt	
642B	L2 Tmr Val	0s	43471	170/120	4D8F	19855	Long, 1=1s	EInt	
643	Logic 3		31095	121/239	2447	1095	UInt, 1=1	UInt	
6431	L3 Expr	((1.2).3).4	43472	170/121	4D90	19856	UInt	UInt	
6432	L3 Input 1	CA1	43473	170/122	4D91	19857	UInt	UInt	
6433	L3 Op 1	&	43474	170/123	4D92	19858	UInt	UInt	
6434	L3 Input 2	NOT1	43475	170/124	4D93	19859	UInt	UInt	
6435	L3 Op 2	&	43476	170/125	4D94	19860	UInt	UInt	
6436	L3 Input 3	Run	43477	170/126	4D95	19861	UInt	UInt	
6437	L3 Op 3	.	43478	170/127	4D96	19862	UInt	UInt	
6438	L3 Input 4	Off	43479	170/128	4D97	19863	UInt	UInt	
6439	L3 Set Dly	0s	43480	170/129	4D98	19864	Long, 1=1s	EInt	
643A	L3 Res Dly	0s	43481	170/130	4D99	19865	Long, 1=1s	EInt	
643B	L3 Tmr Val	0s	43482	170/131	4D9A	19866	Long, 1=1s	EInt	

Menu Parameters		Default settings	Modbus Instance/ Device Net No.	Profibus slot/index	EtherCAT index (HEX)	Profinet index	Fieldbus format	Modbus format	Notes
644	Logic 4		31096	121/240	2448	1096	UInt, 1=1	UInt	
6441	L4 Expr	((1.2).3).4	43483	170/132	4D9B	19867	UInt	UInt	
6442	L4 Input 1	CA1	43484	170/133	4D9C	19868	UInt	UInt	
6443	L4 Op 1	&	43485	170/134	4D9D	19869	UInt	UInt	
6444	L4 Input 2	NOT1	43486	170/135	4D9E	19870	UInt	UInt	
6445	L4 Op 2	&	43487	170/136	4D9F	19871	UInt	UInt	
6446	L4 Input 3	Run	43488	170/137	4DA0	19872	UInt	UInt	
6447	L4 Op 3	.	43489	170/138	4DA1	19873	UInt	UInt	
6448	L4 Input 4	Off	43490	170/139	4DA2	19874	UInt	UInt	
6449	L4 Set Dly	0s	43491	170/140	4DA3	19875	Long, 1=1s	EInt	
644A	L4 Res Dly	0s	43492	170/141	4DA4	19876	Long, 1=1s	EInt	
644B	L4 Tmr Val	0s	43493	170/142	4DA5	19877	Long, 1=1s	EInt	
650	Timers [650]								
651	Timer 1								
6511	Timer1 Trig	Off	43600	170/249	4E10	19984	UInt	UInt	
6512	Timer1 Mode	Off	43601	170/250	4E11	19985	UInt	UInt	
6513	Timer1Delay	0s	43602	170/251	4E12	19986	Long, 1=1s	EInt	
6514	Timer1 T1	0s	43603	170/252	4E13	19987	Long, 1=1s	EInt	
6515	Timer1 T2	0s	43604	170/253	4E14	19988	Long, 1=1s	EInt	
6516	Timer1Value	0s	43605	170/254	4E15	19989	Long, 1=1s	EInt	
652	Timer2								
6521	Timer2 Trig	Off	43606	171/0	4E16	19990	UInt	UInt	
6522	Timer2 Mode	Off	43607	171/1	4E17	19991	UInt	UInt	
6523	Timer2Delay	0s	43608	171/2	4E18	19992	Long, 1=1s	EInt	
6524	Timer2 T1	0s	43609	171/3	4E19	19993	Long, 1=1s	EInt	
6525	Timer2 T2	0s	43610	171/4	4E1A	19994	Long, 1=1s	EInt	
6526	Timer2Value	0s	43611	171/5	4E1B	19995	Long, 1=1s	EInt	
653	Timer3								
6531	Timer3 Trig	Off	43612	171/6	4E1C	19996	UInt	UInt	
6532	Timer3 Mode	Off	43613	171/7	4E1D	19997	UInt	UInt	
6533	Timer3Delay	0s	43614	171/8	4E1E	19998	Long, 1=1s	EInt	
6534	Timer3 T1	0s	43615	171/9	4E1F	19999	Long, 1=1s	EInt	
6535	Timer3 T2	0s	43616	171/10	4E20	20000	Long, 1=1s	EInt	
6536	Timer3Value	0s	43617	171/11	4E21	20001	Long, 1=1s	EInt	
654	Timer4								
6541	Timer4 Trig	Off	43618	171/12	4E22	20002	UInt	UInt	
6542	Timer4 Mode	Off	43619	171/13	4E23	20003	UInt	UInt	
6543	Timer4Delay	0s	43620	171/14	4E24	20004	Long, 1=1s	EInt	
6544	Timer4 T1	0s	43621	171/15	4E25	20005	Long, 1=1s	EInt	

Menu Parameters		Default settings	Modbus Instance/ Device Net No.	Profibus slot/index	EtherCAT index (HEX)	Profinet index	Fieldbus format	Modbus format	Notes
6545	Timer4 T2	0s	43622	171/16	4E26	20006	Long, 1=1s	EInt	
6546	Timer4Value	0s	43623	171/17	4E27	20007	Long, 1=1s	EInt	
660	Flip flops [660]								
661	Flip flop 1								
6611	F1 mode	Reset	43630	171/24	4E2E	20014	UInt	UInt	
6612	F1 set	Off	43631	171/25	4E2F	20015	UInt	UInt	
6613	F1 reset	Off	43632	171/26	4E30	20016	UInt	UInt	
6614	F1 set Dly	0s	43633	171/27	4E31	20017	Long, 1=1s	EInt	
6615	F1 res Dly	0s	43634	171/28	4E32	20018	Long, 1=1s	EInt	
6616	F1 Tmr Val	0s	43635	171/29	4E33	20019	Long, 1=1s	EInt	
662	Flip flop 2								
6621	F2 mode	Reset	43636	171/30	4E34	20020	UInt	UInt	
6622	F2 set	Off	43637	171/31	4E35	20021	UInt	UInt	
6623	F2 reset	Off	43638	171/32	4E36	20022	UInt	UInt	
6624	F2 Set Dly	0s	43639	171/33	4E37	20023	Long, 1=1s	EInt	
6625	F2 Res Dly	0s	43640	171/34	4E38	20024	Long, 1=1s	EInt	
6626	F2 Tmr Val	0s	43641	171/35	4E39	20025	Long, 1=1s	EInt	
663	Flip flop 3								
6631	F3 mode	Reset	43642	171/36	4E3A	20026	UInt	UInt	
6632	F3 set	Off	43643	171/37	4E3B	20027	UInt	UInt	
6633	F3 reset	Off	43645	171/39	4E3D	20029	Long	EInt	
6634	F3 Set Dly	0s	43645	171/39	4E3D	20029	Long, 1=1s	EInt	
6635	F3 Res Dly	0s	43646	171/40	4E3E	20030	Long, 1=1s	EInt	
6636	F3 Tmr Val	0s	43647	171/41	4E3F	20031	Long, 1=1s	EInt	
664	Flip flop 4								
6641	F4 mode	Reset	43648	171/42	4E40	20032	UInt	UInt	
6642	F4 set	Off	43649	171/43	4E41	20033	UInt	UInt	
6643	F4 reset	Off	43650	171/44	4E42	20034	UInt	UInt	
6644	F4 Set Dly	0s	43651	171/45	4E43	20035	Long, 1=1s	EInt	
6645	F4 Res Dly	0s	43652	171/46	4E44	20036	Long, 1=1s	EInt	
6646	F4 Tmr Val	0s	43653	171/47	4E45	20037	Long, 1=1s	EInt	
670	Counters [670]								
671	Counter1								
6711	C1 Trig	Off	43654	171/48	4E46	20038	UInt	UInt	
6712	C1 Reset	Off	43655	171/49	4E47	20039	UInt	UInt	
6713	C1 High Val	0	43656	171/50	4E48	20040	Long, 1=1	EInt	
6714	C1 Low Val	0	43657	171/51	4E49	20041	Long, 1=1	EInt	
6715	C1 DecTimer	Off	43658	171/52	4E4A	20042	Long, 1=1s	EInt	

Menu Parameters		Default settings	Modbus Instance/ Device Net No.	Profibus slot/index	EtherCAT index (HEX)	Profinet index	Fieldbus format	Modbus format	Notes
6719	C1 Value	0	43659	171/53	4E4B	20043	UInt, 1=1	UInt	
672	Counter2								
6721	C2 Trig	Off	43660	171/54	4E4C	20044	UInt	UInt	
6722	C2 Reset	Off	43661	171/55	4E4D	20045	UInt	UInt	
6723	C2 High Val	0	43662	171/56	4E4E	20046	Long, 1=1	EInt	
6724	C2 High Val	0	43663	171/57	4E4F	20047	Long, 1=1	EInt	
6725	C2 DecTimer	Off	43664	171/58	4E50	20048	Long, 1=1s	EInt	
6729	C2 Value	0	43665	171/59	4E51	20049	UInt, 1=1	UInt	
680	Clock Logic [680]								
681	Clock 1								
6811	Clk1TimeON	00:00:00	43670	171/64	4E56	20054	Long, 1=1h	EInt	
			43671	171/65	4E57	20055	Long, 1=1m	EInt	
			43672	171/66	4E58	20056	Long, 1=1s	EInt	
6812	Clk1TimeOff	00:00:00	43673	171/67	4E59	20057	Long, 1=1h	EInt	
			43674	171/68	4E5A	20058	Long, 1=1m	EInt	
			43675	171/69	4E5B	20059	Long, 1=1s	EInt	
6813	Clk1DateOn	2000-00-00	43676	171/70	4E5C	20060	Long, 1=1y	EInt	
			43677	171/71	4E5D	20061	Long, 1=1m	EInt	
			43678	171/72	4E5E	20062	Long, 1=1d	EInt	
6814	Clk1DateOff	2000-00-00	43679	171/73	4E5F	20063	Long, 1=1y	EInt	
			43680	171/74	4E60	20064	Long, 1=1m	EInt	
			43681	171/75	4E61	20065	Long, 1=1d	EInt	
6815	Clk1Weekday	MTWWTFSS	43682	171/76	4E62	20066	UInt, 1=1	UInt	
682	Clock 2								
6821	Clk2TimeON	00:00:00	43684	171/78	4E64	20068	Long, 1=1h	EInt	
			43685	171/79	4E65	20069	Long, 1=1m	EInt	
			43686	171/80	4E66	20070	Long, 1=1s	EInt	
6822	Clk2TimeOff	00:00:00	43687	171/81	4E67	20071	Long, 1=1h	EInt	
			43688	171/82	4E68	20072	Long, 1=1m	EInt	
			43689	171/83	4E69	20073	Long, 1=1s	EInt	
6823	Clk2DateOn	2000-00-00	43690	171/84	4E6A	20074	Long, 1=1y	EInt	
			43691	171/85	4E6B	20075	Long, 1=1m	EInt	
			43692	171/86	4E6C	20076	Long, 1=1d	EInt	
6824	Clk2DateOff	2000-00-00	43693	171/87	4E6D	20077	Long, 1=1y	EInt	
			43694	171/88	4E6E	20078	Long, 1=1m	EInt	
			43695	171/89	4E6F	20079	Long, 1=1d	EInt	
6825	Clk2Weekday	MTWWTFSS	43696	171/90	4E70	20080	UInt, 1=1	UInt	
700	View Operation/ Status [700]								

Menu Parameters		Default settings	Modbus Instance/ Device Net No.	Profibus slot/index	EtherCAT index (HEX)	Profinet index	Fieldbus format	Modbus format	Notes
710	Operation [710]								
711	Process Val		31001	121/145	23E9	1001	Long, 1=0.001	EInt	
712	Speed		31002	121/146	23EA	1002	Int, 1=1rpm	Int	
713	Torque		31003	121/147	23EB	1003	Long, 1=0.1Nm	EInt	
			31004	121/148	23EC	1004	Long, 1=1%	EInt	
714	Shaft Power		31005	121/149	23ED	1005	Long, 1=1W	EInt	
715	El Power		31006	121/150	23EE	1006	Long, 1=1W	EInt	
716	Current		31007	121/151	23EF	1007	Long, 1=0.1A	EInt	
717	Output Volt		31008	121/152	23F0	1008	Long, 1=0.1V	EInt	
718	Frequency		31009	121/153	23F1	1009	Long, 1=0.1Hz	EInt	
719	DC Voltage		31010	121/154	23F2	1010	Long, 1=0.1V	EInt	
71A	IGBT Temp		31011	121/155	23F3	1011	Long, 1=0.1°C	EInt	
71B	PT100 1,2,3		31012	121/156	23F4	1012	Long, 1=1°C	EInt	
			31013	121/157	23F5	1013	Long, 1=1°C	EInt	
			31014	121/158	23F6	1014	Long, 1=1°C	EInt	
71C	PT100 4,5,6		31097	121/241	2449	1097	Long, 1=1°C	EInt	
			31098	121/242	244A	1098	Long, 1=1°C	EInt	
			31099	121/243	244B	1099	Long, 1=1°C	EInt	
720	Status [720]								
721	VSD Status		31015	121/159	23F7	1015	UInt	UInt	
722	Warning		31016	121/160	23F8	1016	UInt	UInt	
723	DigIn Status		31017	121/161	23F9	1017	UInt, 1=1	UInt	
724	DigOutStatus		31018	121/162	23FA	1018	UInt, 1=1	UInt	
725	AnIn 1 2		31019	121/163	23FB	1019	Long, 1=1%	EInt	
			31020	121/164	23FC	1020	Long, 1=1%	EInt	
726	AnIn 3 4		31021	121/165	23FD	1021	Long, 1=1%	EInt	
			31022	121/166	23FE	1022	Long, 1=1%	EInt	
727	AnOut 1 2		31023	121/167	23FF	1023	Long, 1=1%	EInt	
			31024	121/168	2400	1024	Long, 1=1%	EInt	
728	IO Status B1		31025	121/169	2401	1025	UInt, 1=1	UInt	
729	IO Status B2		31026	121/170	2402	1026	UInt, 1=1	UInt	
72A	IO Status B3		31027	121/171	2403	1027	UInt, 1=1	UInt	
72B	Area D Stat								
72B1	Area D LSB		30180	118/89	20B4	180	UInt, 1=1	UInt	
72B2	Area D MSB		30182	118/91	20B6	182	UInt, 1=1	UInt	
72C	VIO Status		30181	118/90	20B5	181	UInt, 1=1	UInt	
730	Stored values [730]								

Menu Parameters		Default settings	Modbus Instance/ Device Net No.	Profibus slot/index	EtherCAT index (HEX)	Profinet index	Fieldbus format	Modbus format	Notes
731	Run Time		31028	121/172	2404	1028	Long, 1=1h	EInt	
			31029	121/173	2405	1029	Long, 1=1m	EInt	
			31030	121/174	2406	1030	Long, 1=1s	EInt	
7311	Reset RunTm	No	7	0/6	2007	7	UInt	UInt	
732	Mains Time	hh:mm:ss	31031	121/175	2407	1031	Long, 1=1h	EInt	
			31032	121/176	2408	1032	Long, 1=1m	EInt	
			31033	121/177	2409	1033	Long, 1=1s	EInt	
733	Energy	Wh	31034	121/178	240A	1034	Long, 1=1Wh	EInt	
7331	Rst Energy	No	6	0/5	2006	6	UInt	UInt	
800	View Trip Log [800]								
810	Trip message log [810]		31101	121/245	244D	1101	UInt, 1=1	UInt	
811	Process Val		31102	121/246	244E	1102	Long, 1=0.001	EInt	
812	Speed		31103	121/247	244F	1103	Int, 1=1rpm	Int	
813	Torque		31104	121/248	2450	1104	Long, 1=0.1Nm	EInt	
			31105	121/249	2451	1105	Long, 1=1%	EInt	
814	Shaft Power		31106	121/250	2452	1106	Long, 1=1W	EInt	
815	El Power		31107	121/251	2453	1107	Long, 1=1W	EInt	
816	Current		31108	121/252	2454	1108	Long, 1=0.1A	EInt	
817	Output volt		31109	121/253	2455	1109	Long, 1=0.1V	EInt	
818	Frequency		31110	121/254	2456	1110	Long, 1=0.1Hz	EInt	
819	DC Voltage		31111	122/0	2457	1111	Long, 1=0.1V	EInt	
81A	IGBT Temp		31112	122/1	2458	1112	Long, 1=0.1°C	EInt	
81B	PT100 1,2,3		31113	122/2	2459	1113	Long, 1=1°C	EInt	
			31114	122/3	245A	1114	Long, 1=1°C	EInt	
			31115	122/4	245B	1115	Long, 1=1°C	EInt	
81C	VSD Status		31116	122/5	245C	1116	UInt	UInt	
81D	DigIn Status		31117	122/6	245D	1117	UInt, 1=1	UInt	
81E	DigOutStatus		31118	122/7	245E	1118	UInt, 1=1	UInt	
81F	AnIn 1 2		31119	122/8	245F	1119	Long, 1=1%	EInt	
			31120	122/9	2460	1120	Long, 1=1%	EInt	
81G	AnIn 3 4		31121	122/10	2461	1121	Long, 1=1%	EInt	
			31122	122/11	2462	1122	Long, 1=1%	EInt	
81H	AnOut1 2		31123	122/12	2463	1123	Long, 1=1%	EInt	
			31124	122/13	2464	1124	Long, 1=1%	EInt	
81I	IO Status B1		31125	122/14	2465	1125	UInt, 1=1	UInt	
81J	IO Status B2		31126	122/15	2466	1126	UInt, 1=1	UInt	
81K	IO Status B3		31127	122/16	2467	1127	UInt, 1=1	UInt	

Menu Parameters		Default settings	Modbus Instance/ Device Net No.	Profibus slot/index	EtherCAT index (HEX)	Profinet index	Fieldbus format	Modbus format	Notes
81L	Run Time		31128	122/17	2468	1128	Long, 1=1h	EInt	
			31129	122/18	2469	1129	Long, 1=1m	EInt	
			31130	122/19	246A	1130	Long, 1=1s	EInt	
81M	Mains Time		31131	122/20	246B	1131	Long, 1=1h	EInt	
			31132	122/21	246C	1132	Long, 1=1m	EInt	
			31133	122/22	246D	1133	Long, 1=1s	EInt	
81N	Energy		31147	122/36	247B	1147	Long, 1=1Wh	EInt	
81O	Set/View ref		31135	122/24	246F	1135	Long, 1=0.001	EInt	
81P	VIO Status		31136	122/25	2470	1136	UInt, 1=1	UInt	
81Q	PT100 4,5,6		31137	122/26	2471	1137	Long, 1=1°C	EInt	
			31138	122/27	2472	1138	Long, 1=1°C	EInt	
			31139	122/28	2473	1139	Long, 1=1°C	EInt	
820	Trip Message (Log 2)		31151 to 31189	122/40 to 122/78	247F to 24A5	1151 to 1189			
830	Trip Message (Log 3)		31201 to 31239	122/90 to 122/128	24B1 to 24D7	1201 to 1239			
840	Trip Message (Log 4)		31251 to 31289	122/140 to 122/178	24E3 to 2509	1251 to 1289			
850	Trip Message (Log 5)		31301 to 31339	122/190 to 122/228	2515 to 253B	1301 to 1339			
860	Trip Message (Log 6)		31351 to 31389	122/240 to 123/23	2547 to 256D	1351 to 1389			
870	Trip Message (Log 7)		31401 to 31439	123/35 to 123/73	2579 to 259F	1401 to 1439			
880	Trip Message (Log 8)		31451 to 31489	123/85 to 123/123	25AB to 25D1	1451 to 1489			
890	Trip Message (Log 9)		31501 to 31539	123/135 to 123/173	25DD to 2603	1501 to 1539			
8A0	Reset Trip L	No	8	0/7	2008	8	UInt	UInt	
900	System Data [900]								
920	VSD Data [920]								
921	VSD Type		31037	121/181	240D	1037	UInt, 1=1	UInt	
922	Software		31038	121/182	240E	1038	UInt	UInt	
			31039	121/183	240F	1039	UInt	UInt	

Menu Parameters		Default settings	Modbus Instance/ Device Net No.	Profibus slot/index	EtherCAT index (HEX)	Profinet index	Fieldbus format	Modbus format	Notes
9221	Build Info		31040	121/184	2410	1040	UInt	UInt	
			31041	121/185	2411	1041	UInt	UInt	
			31042	121/186	2412	1042	UInt	UInt	
			31043	121/187	2413	1043	UInt	UInt	
			31044	121/188	2414	1044	UInt	UInt	
			31045	121/189	2415	1045	UInt	UInt	
9222	Build ID		30160	118/69	20A0	160	UInt	UInt	
923	Unit Name	0	42301	165/225	48FD	18685	UInt	UInt	
			42302	165/226	48FE	18686	UInt	UInt	
			42303	165/227	48FF	18687	UInt	UInt	
			42304	165/228	4900	18688	UInt	UInt	
			42305	165/229	4901	18689	UInt	UInt	
			42306	165/230	4902	18690	UInt	UInt	
			42307	165/231	4903	18691	UInt	UInt	
			42308	165/232	4904	18692	UInt	UInt	
			42309	165/233	4905	18693	UInt	UInt	
			42310	165/234	4906	18694	UInt	UInt	
			42311	165/235	4907	18695	UInt	UInt	
			42312	165/236	4908	18696	UInt	UInt	
924	Hardware								
9241	CB Key		39900	156/119	20D2	210	UInt	UInt	
925	CtrlPanel								
9251	CP SW ver		39901	156/120	46AD	9901	UInt	UInt	
9252	CP HW ver		39902	156/121	46AE	9902	UInt, 1=1	UInt	
9253	CP Build ID		30220	118/129	20DC	220	UInt	UInt	
930	Clock [930]								
931	Time	00:00:00	42601	167/15	4A29	18985	Long, 1=1h	EInt	
			42602	167/16	4A2A	18986	Long, 1=1m	EInt	
			42603	167/17	4A2B	18987	Long, 1=1s	EInt	
932	Date	2000-00-00	42604	167/18	4A2C	18988	Long, 1=1y	EInt	
			42605	167/19	4A2D	18989	Long, 1=1m	EInt	
			42606	167/20	4A2E	18990	Long, 1=1d	EInt	
933	Weekday	Monday	42607	167/21	4A2F	18991	Long	EInt	

Index

Symbols
+10VDC Supply voltage 260
+24VDC Supply voltage 260
Numerics
-10VDC Supply voltage 260
Menu
113, 114, 131, 135, 136, 156, 158, 172, 176
4-20mA 180
Menu
178, 180
A
Abbreviations 12
Acceleration 144, 147
Acceleration ramp 147
Acceleration time 144
Ramp type 147
Alarm trip 171
Alternating MASTER 70, 73, 74, 163
Analogue comparators 195
Analogue input 178
AnIn1 178
AnIn2 182, 183
Offset 179, 187
Analogue Output 186, 189, 260
AnOut 1 186, 189
Output configuration 187, 190
AnIn2 182
AnIn3 183
AnIn4 183
Autoreset 2, 65, 124, 227
B
Brake function 148, 149
Bake release time 148
Brake 150
Brake Engage Time 150
Brake wait time 150
Release speed 150
Vector Brake 150
Brake functions
Frequency 178
Brake resistors 235
C
Cable specifications 36
Cascade controller 69
CE-marking 11
Change Condition 164
change sign of a value 91, 94, 96
Change Timer 164
Checklist 74
Clockwise rotary field 184
Comparators 195
Connecting control signals 51
Connections
Brake chopper connections 29
Control signal connections 51
Mains supply 29, 55
Motor earth 29
Motor output 29, 55
Safety earth 29, 55
Control Panel memory
Copy all settings to Control Panel 123
Frequency 178
Control signal connections 51
Control signals 48, 53
Edge-controlled 65, 108
Level-controlled 65, 108
Counter-clockwise rotary field 184
Current 49
Current control (0-20mA) 54
D
Date 90, 224
DC-link residual voltage 2
Deceleration 145
Deceleration time 145
Ramp type 147
Declaration of Conformity 11
Default 123
Definitions 12
Digital comparators 195
Digital inputs
Board Relay 193
DigIn 1 184
DigIn 2 185
DigIn 3 186
Dismantling and scrapping 11
Display 87, 92
Double-ended connection 53
Drive mode 104
Frequency 178
Drives on Change 164
E
Edge control 65, 102, 108
Electrical 212
Electrical specification 248
EMC 29
Current control (0-20mA) 54
Double-ended connection 53
RFI mains filter 29
Single-ended connection 53
Twisted cables 54
Emergency stop 77
EmoSoftCom 235
EN60204-1 11
EN61800-3 11
EN61800-5-1 11
Enable 64, 90, 93, 184
EtherCAT 237
External Control Panel 234
F
Factory settings 123
Fail safe 71
Fans 163
Feedback 'Status' input 70
Fixed MASTER 74, 163
Flux optimization 157
Frequency
Frequency priority 63
Jog Frequency 155
Maximum Frequency 152, 153
Minimum Frequency 152
Preset Frequency 158
Skip Frequency 153, 154
Frequency priority 63
Fuses and glands 255
G
General electrical specifications 248
Gland kits 235
Global parameters 122
H
Handheld Control Panel 2.0 234
Hydrophore controller 69
I
I/O Board 237
I/O board option 69
I2t protection
Motor I2t Current 118, 120
Motor I2t Type 117
ID run 112
Identification Run 66, 112
IEC269 255
Industrial Ethernet 237
Interrupt 134, 135, 136
IT Mains supply 2
IxR Compensation 156
J
Jog Frequency 155
K
Keyboard reference 159
Keys 90, 93
- Key 92, 95

+ Key 92, 95
Control keys 90, 93
ENTER key 92, 95
ESCAPE key 92, 95
Function keys 92, 95
NEXT key 92, 95
PREVIOUS key 92, 95
RUN L 90, 93
RUN R 90, 93
STOP/RESET 90, 93
Toggle Key 91, 94
L
LCD display 87, 92
Level control 65, 108
Liquid cooling 238
Load default 123
Load monitor 67, 171
Local/Remote 106
Lock code 107, 109
Long motor cables 31
Low Voltage Directive 11
Lower Band 165
Lower Band Limit 167
M
Machine Directive 11
Main menu 96
Mains supply 29, 47, 55
Maintenance 231
Manis cables 26
Max Frequency 144, 153
Memory 66
Menu
(110) 101
(120) 102, 103
(210) 103
(211) 103
(212) 104
(213) 104
(214) 105
(215) 105
(216) 106
(217) 106
(218) 107, 109
(219) 107
(21A) 108
(21B) 108
(220) 109
(221) 109
(222) 110
(223) 110
(224) 110
(225) 111
(226) 111
(227) 111
(228) 111
(229) 112
(22A) 112
(22B) 112
(22C) 113
(22D) 113
(230) 117
(231) 117
(232) 118
(233) 118
(234) 120
(235) 120
(236) 120
(237) 121
(240) 122
(241) 122
(242) 122
(243) 123
(244) 123
(245) 124
(250) 124
(251) 125
(252) 125
(253) 125
(254) 126
(255) 126
(256) 126
(257) 126
(258) 126
(259) 127
(25A) 127
(25B) 127
(25C) 127
(25D) 127
(25E) 127
(25F) 128
(25G) 128
(25H) 128
(25I) 128
(25J) 128
(25K) 129
(25L) 129
(25M) 129
(25N) 129
(25O) 129
(25P) 129
(25Q) 130
(25R) 130
(25S) 130
(25T) 130
(25U) 130
(260) 131
(261) 131
(262) 131
(2621) 132
(2622) 132
(263) 132
(2631) 132
(2632) 133
(2633) 133
(2634) 133
(264) 134
(265) 135
(269) 136
(310) 139
(320) 140
(321) 140
(322) 141
(323) 141
(324) 142
(325) 142
(326) 143
(327) 143
(328) 143
(331) 144
(332) 145
(333) 145
(334) 145
(335) 146
(336) 146
(337) 147
(338) 147
(339) 147
(33A) 148
(33B) 148
(33C) 148
(33D) 150
(33E) 150
(33F) 150
(33G) 150
(33H1) 150
(341) 152
(342) 152
(343) 153
(344) 153
(345) 154
(346) 154
(347) 154
(348) 155
(351) 156
(354) 157
(361) 158
(362) 158
(363) 158
(364) 158
(365) 158
(366) 158
(367) 158

(368) 158
(369) 159
(380) 159
(381) 159
(383) 159
(384) 160
(385) 160
(386) 160
(387) 161
(388) 161
(389) 162
(391) 163
(392) 163
(393) 163
(394) 164
(395) 164
(396) 164
(398) 165
(399) 166
(39A) 166
(39B) 166
(39C) 167
(39D) 167
(39E) 167
(39F) 168
(39G) 168
(39H-39M) 169
(410) 171
(411) 171
(412) 171
(413) 171
(414) 171
(415) 172
(416) 172
(4162) 173
(417) 173
(4171) 173
(4172) 173
(418) 173
(4181) 173
(4182) 174
(419) 174
(4191) 174
(4192) 174, 176
(41A) 174
(41B) 175
(41C) 175
(421) 176
(422) 177
(423) 177
(424) 177
(511) 178
(512) 179
(513) 180
(514) 182
(515) 182
(516) 183
(517) 183
(518) 183
(519) 183
(51A) 183
(51B) 183
(51C) 184
(521) 151, 152, 184
(522) 185
(529-52H) 186
(531) 186
(532) 187
(533) 187
(534) 189
(535) 190
(536) 190
(541) 190
(542) 192
(551) 192
(552) 192
(553) 193
(55D) 193
(561) 194
(562) 194
(563-56G) 194
(610) 195
(6111) 195
(6112) 197
(6113) 199
(6114) 199
(6115) 200, 201
(621) 201, 202, 203, 204, 205
(640) 205
(641) 206
(642) 206
(643) 206
(644) 206
(645) 206
(650) 206
(711) 211
(712) 211
(713) 212
(714) 212
(715) 212
(716) 212
(717) 212
(718) 213
(719) 213
(71A) 213
(71B) 213
(720) 214
(721) 214
(722) 215
(723) 215
(724) 216
(725) 216
(726) 216
(727) 217
(728-72A) 217
(730) 218
(731) 218
(7311) 218
(732) 218
(733) 218
(7331) 218
(800) 219
(811-81N) 220
(820) 220
(8A0) 221
(900) 221
(920) 221
(922) 221, 223
33F 150
Minimum Frequency 146
Modbus/TCP 237
Monitor function
Alarm Select 175
Auto set 174
Delay time 171
Max Alarm 171
Overload 67, 171
Ramp Enable 171
Response delay 172, 173, 175
Start delay 171
Motor cables 29
Motor cos phi (power factor) 111
Motor data 109
Motor frequency 111
Motor I2t Current 228
Motor identification run 112
Motor Lost 126
Motor lost 177
Motor Potentiometer 158, 184
Motor potentiometer 184
Motor PTC 50, 51, 121
Motor ventilation 111
Motors 7
Motors in parallel 45
MotPot 145
Multi-motor application 104
N
Nominal motor frequency 153
Number of drives 163
O
Operation 103
Options 54, 233

External Control Panel (ECP) 234
I/O Board 237
Output chokes 238
Output Voltage 212
Overload 67, 171
Overload alarm 67
P
Parameter sets
Load default values 123
Load parameter sets from Control Panel 124
Parameter Set Selection 61
Select a Parameter set 122
PID control 72
PID Controller 159
Closed loop PID control 160
Feedback signal 159
PID D Time 160
PID I Time 160
PID P Gain 159
Priority 63
Process Protection 176
Process Value 211
Product standard, EMC 10
Programming 96
PT100 Inputs 120, 121
PTC/PT100 board 237
Pump size 74
Pump/Fan Control 163
Q
Quick Setup Card 7
R
Reference
Frequency 176
Motor potentiometer 184
Reference signal 104, 139
Set reference value 139
Torque 177
View reference value 139
Reference control 105
Reference signal 105
Relay output 192
Relay 1 192
Relay 2 192
Relay 3 193
Release speed 150
Remote control 64
Reset command 184
Reset control 106
Resolution 101
RFI mains filter 29
Rotation 107
RS232/485 131
RTC- Real time clock 237
RUN 90, 93
Run command 90, 93
Run Left command 184
Run Right command 184
Running motor 148
S
Safe Stop option 238
Select Drive 163
Serial communication 237
Settle Time 167
Setup menu 96
Menu structure 95
Shaft power 212
Signal ground 260
Single-ended connection 53
Software 221
Sound characteristic 112
Speed 211
Spinstart 148
Standards 10
Start Delay 166
Start/Stop settings 144
Status indications 87, 92
Stop categories 77
Stop command 184
Stop Delay 166
Stripping lengths 36
Switching frequency 112
Switching in motor cables 31
T
Technical Data 241
Terminal connections 48
Test Run 112
Time 90, 224
Timer 164
Top cover 239
Torque 156
Transition Frequency 167
Trip 90, 93
Trip causes and remedial action 226
Trip Message log 219
Trips, warnings and limits 225
Twisted cables 54
Type code number 9
U
Underload 67
Underload alarm 171
Unlock Code 107
Upper Band 165
Upper Band Limit 166
V
V/Hz Mode 104
Vector Brake 150
Ventilation 111
View reference value 139
Voltage 49
VSD Data 221
W
Weekday 90, 224
Wiring 73

OMRON

Authorized Distributor:

Cat. No. I127E-EN-05A

Note: Specifications subject to change without notice.

Printed in Europe